BATTERY CHARGER

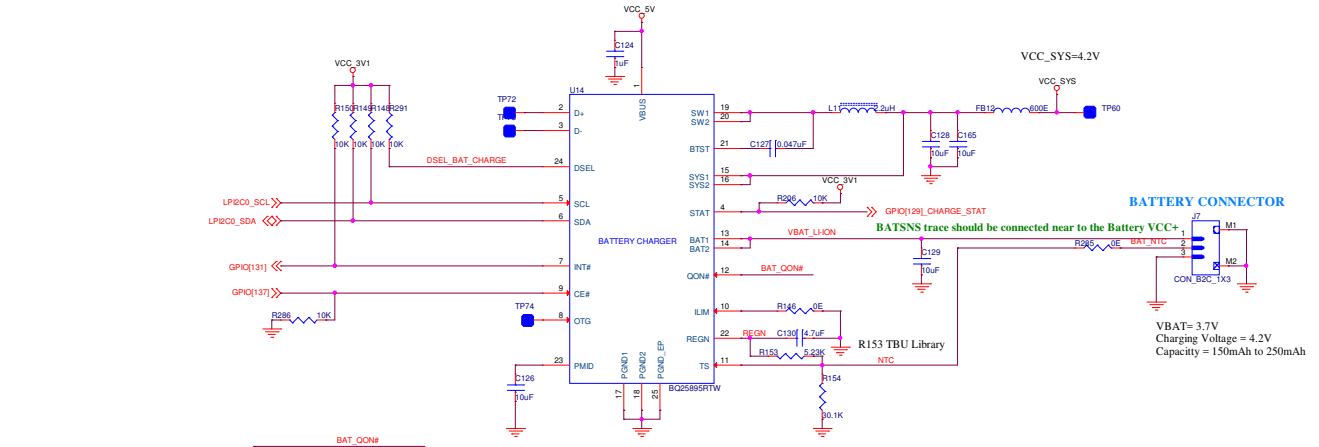

VCC_SYS=4.2V

BATTERY CONNECTOR

BATSNS trace should be connected near to the Battery VCC+

R153 TBU Library

VBAT= 3.7V
Charging Voltage = 4.2V
Capacitty = 150mAh to 250mAh

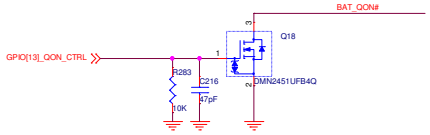

I2C Slave Address: 6AH
Default I2C Slave Address: 0x6AH (1101 010B + R/ W)

* R153 & R154 Res Value to be updated Based on Datasheet

Select 0°C to 45°C range for Li-ion or Li-polymer battery,
RTH_{COLD} = 27.28 kΩ
RTH_{HOT} = 4.91 kΩ
RT1 = 5.21 kΩ
RT2 = 29.87 kΩ

POWER LED