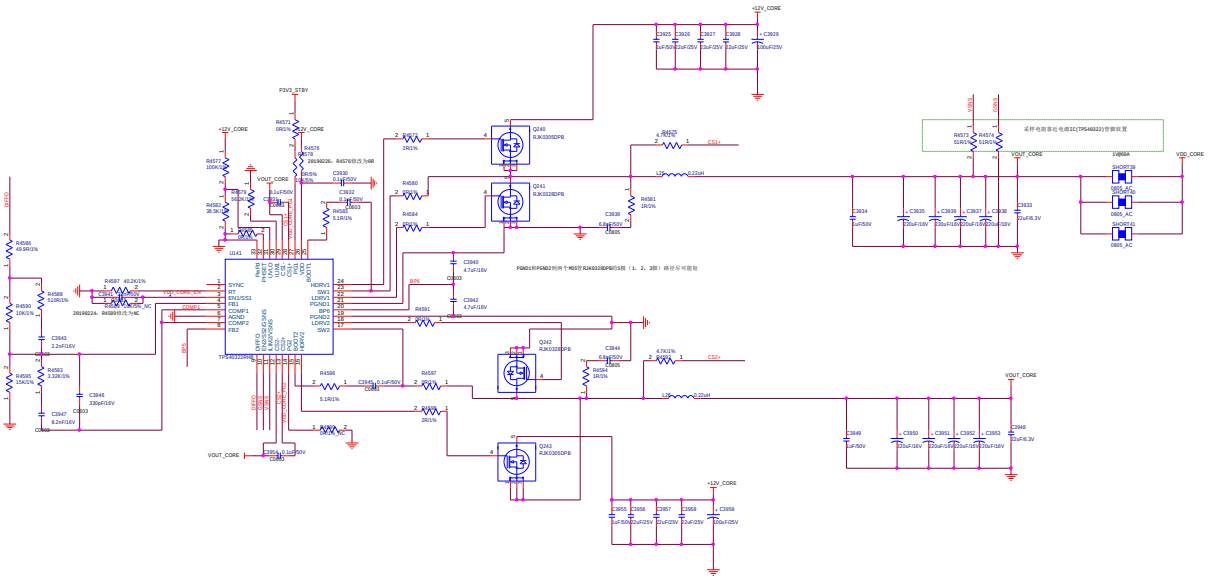
+12V_CORE
P3V3_STBY
VOUT_CORE
VDD_CORE
U141
Q240
Q241
Q242
Q243
采样电阻靠近电源IC(TPS40223)管脚放置
PGND1和PGND2两两个MOS管RJK0330DPB的S脚（1，2，3脚）路径尽可能短
去耦电容放在电源输出端
VDD_CORE_EN
VDD_CORE_PG1
VDD_CORE_PG2
TP61
TP62
TP63
File
MBW-XK_001
Size
A2
Document Number
<Doc>
Rev
Date:
Thursday, February 28, 2019
Sheet
30
of
66