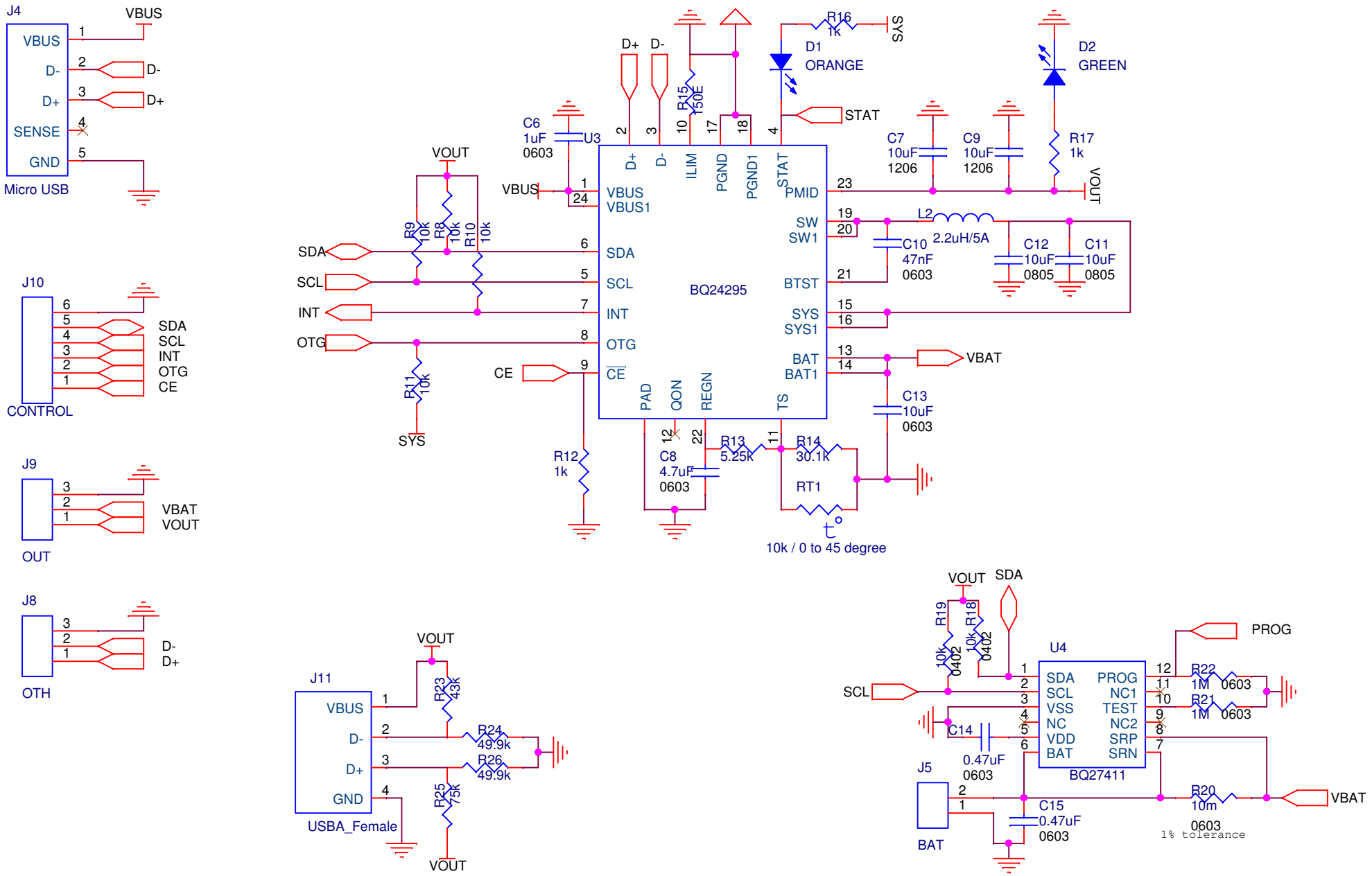

Title	Mitochondria	
Size A	Document Number Mitochondria_1000_V2_Schematic	Rev V2
Date: Friday, February 10, 2017	Sheet 1 of 1	