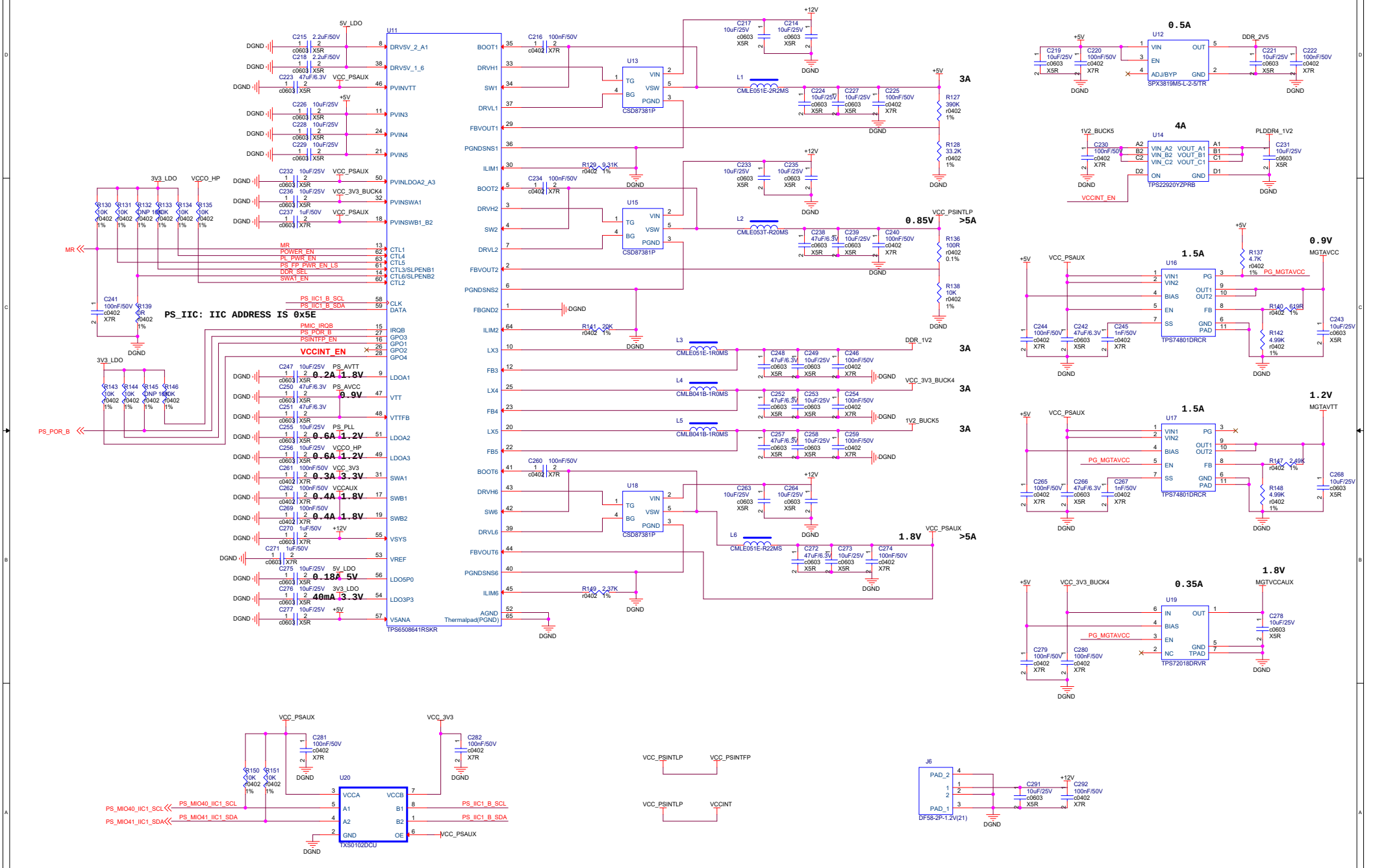

Mech-Mind		
Title: POWER		
Size: C	Document Number: <Doc>	Rev: 1.0
Date: Tuesday, February 15, 2022	Sheet 13 of 21	