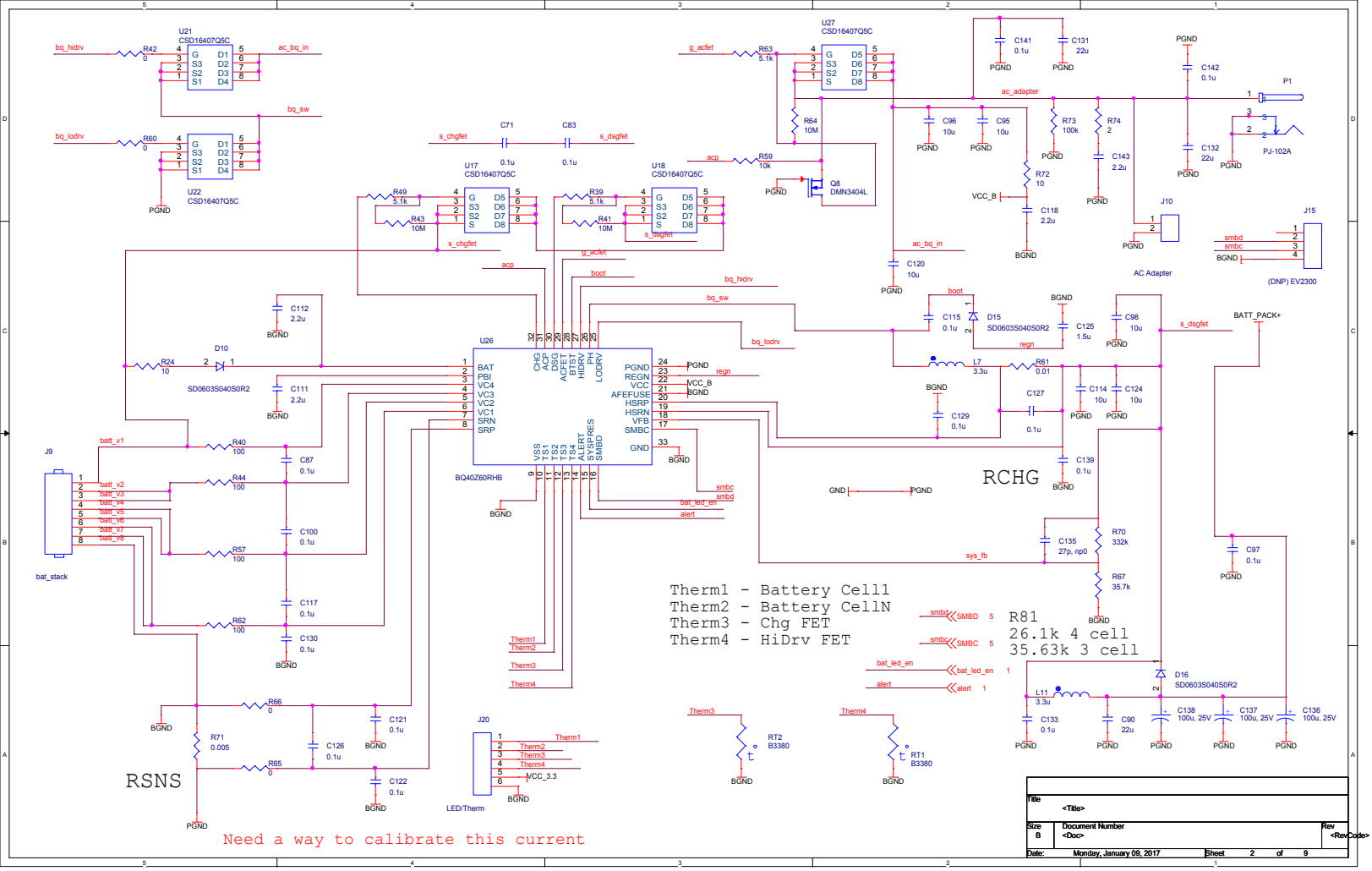
U21
CSD16407Q5C
U22
CSD16407Q5C
U27
CSD16407Q5C
U17
CSD16407Q5C
U18
CSD16407Q5C
U26
BQ40Z60RHB
Q8
DMN3404L
D10
SD0603S040S0R2
D15
SD0603S040S0R2
D16
SD0603S040S0R2
J9
bat_stack
J10
AC Adapter
J15
(DNP) EV2300
P1
PJ-102A
J20
LED/Therm
RT2
B3380
RT1
B3380
RCHG
RSNS
Need a way to calibrate this current
Therm1 - Battery Cell1
Therm2 - Battery CellN
Therm3 - Chg FET
Therm4 - HiDrv FET
R81
26.1k 4 cell
35.63k 3 cell
Title
<Title>
Size
B
Document Number
<Doc>
Rev
<RevCode>
Date:
Monday, January 09, 2017
Sheet
2
of
9