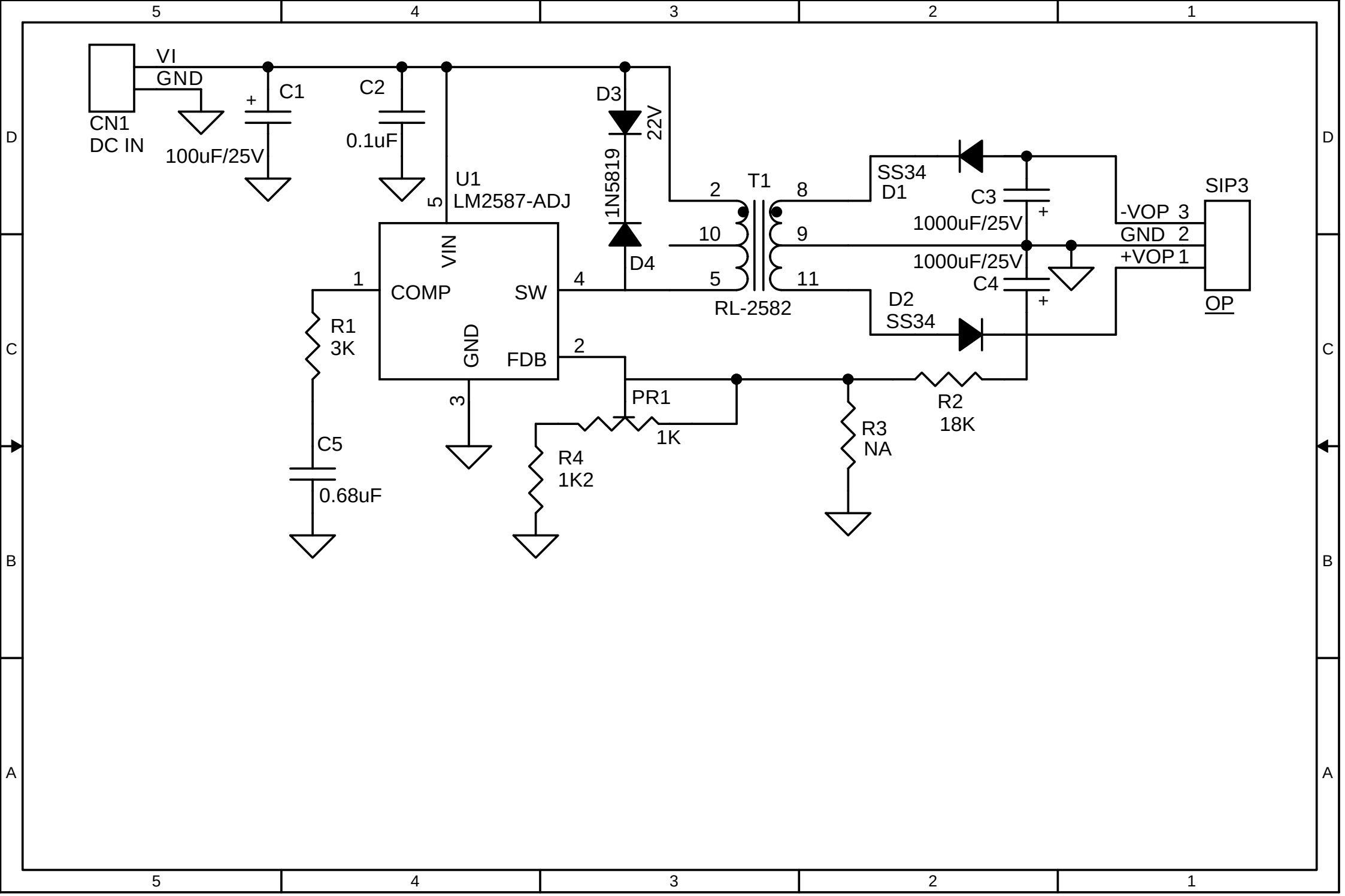
VI
GND
CN1
DC IN
100uF/25V
C1
C2
0.1uF
U1
LM2587-ADJ
VIN
COMP
SW
GND
FDB
D3
22V
1N5819
D4
T1
RL-2582
SS34
D1
C3
1000uF/25V
1000uF/25V
C4
D2
SS34
SIP3
-VOP 3
GND 2
+VOP 1
OP
R1
3K
C5
0.68uF
R4
1K2
PR1
1K
R3
NA
R2
18K