# 12V to 5V @ 20A

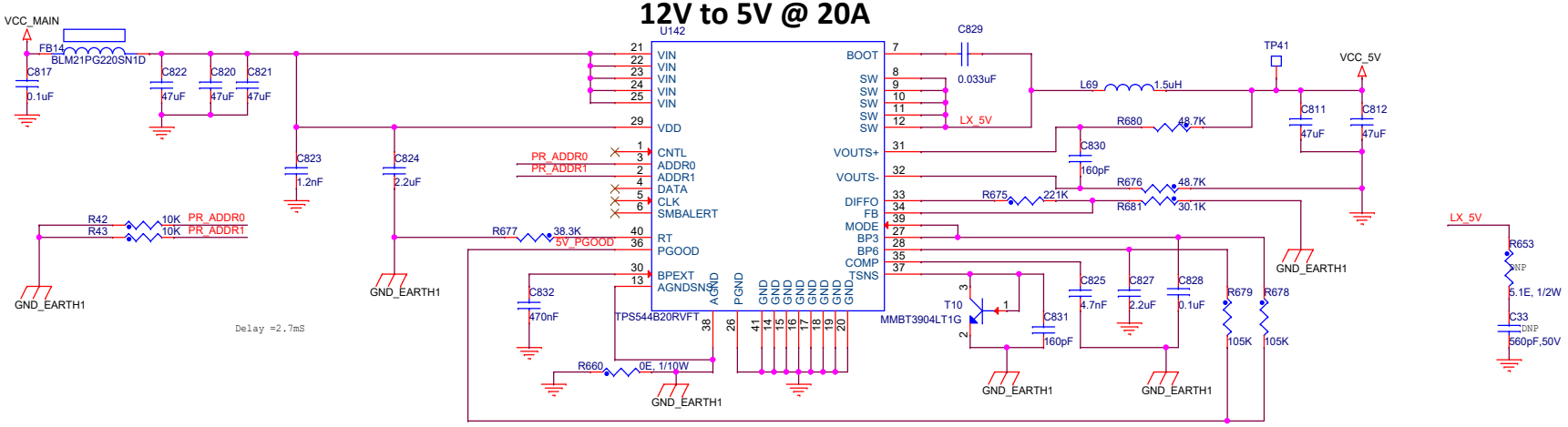


# 12V to 1.15V @ 5.5A

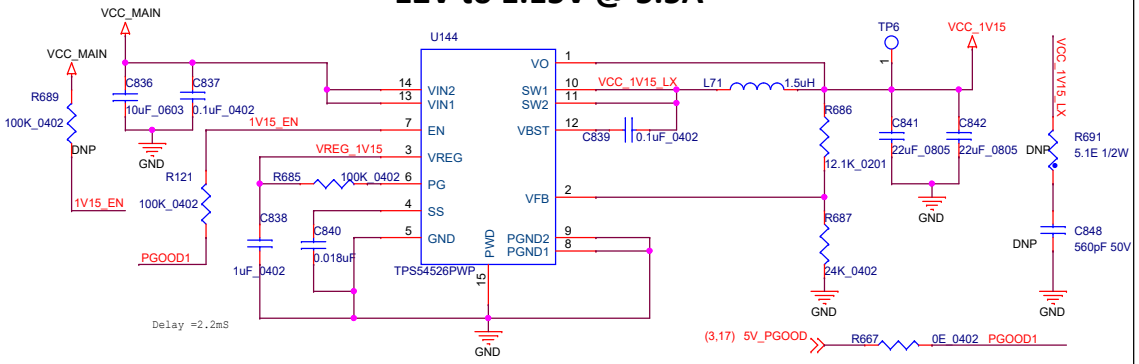


# 12V to 3.3V @ 5.5A

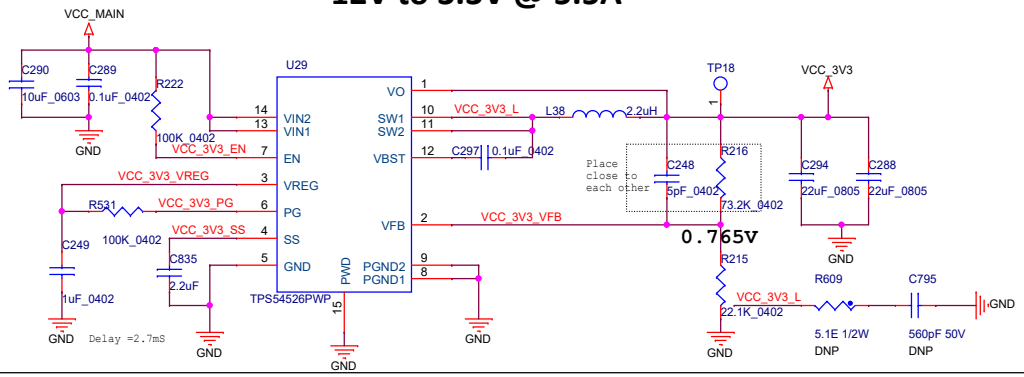


iWave Systems - Confidential
PROPRIETARY NOTICE: This document contains proprietary material for the sole use of the intended recipient(s). Do not read this document if you are not the intended recipient. Any review, use, distribution or disclosure by others is strictly prohibited. If you are not the intended recipient (or authorized to receive for the recipient), you are hereby notified that any disclosure, copying distribution or use of any of the information contained within this document is STRICTLY PROHIBITED. Thank you. "iWave Systems Tech. Pvt. Ltd."

iWave Embedding Intelligence

**POWER REGULATORS**

Title

| Size | Document Number | Rev |
|---|---|---|
| A3 | | 1.0 |

Date: Wednesday, March 27, 2019 Sheet 16 of 18