POWER SEQUENCING AND MONITORING

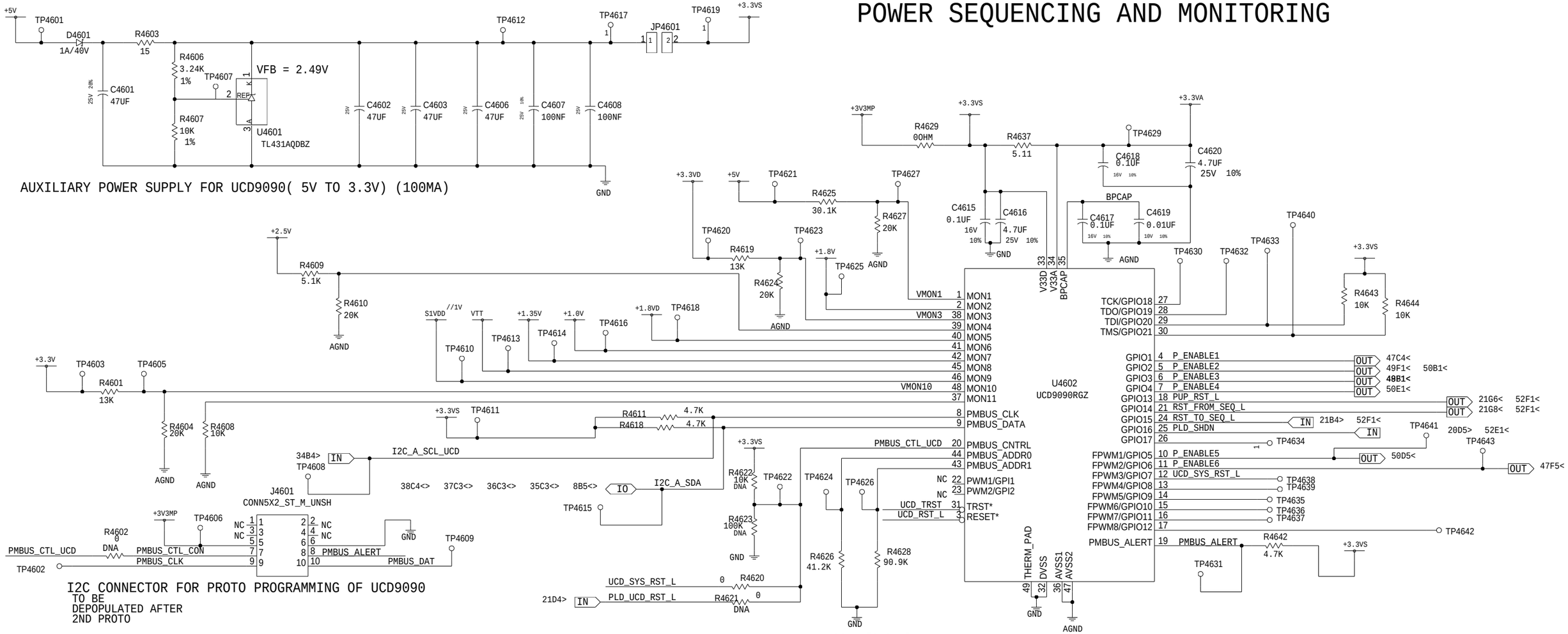

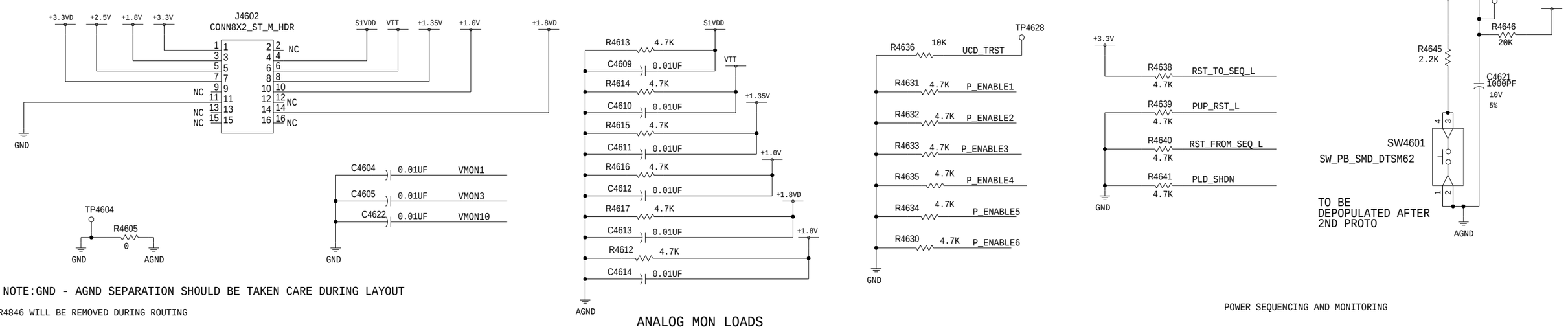

POWER BRICK (-48 TO +3.3V)

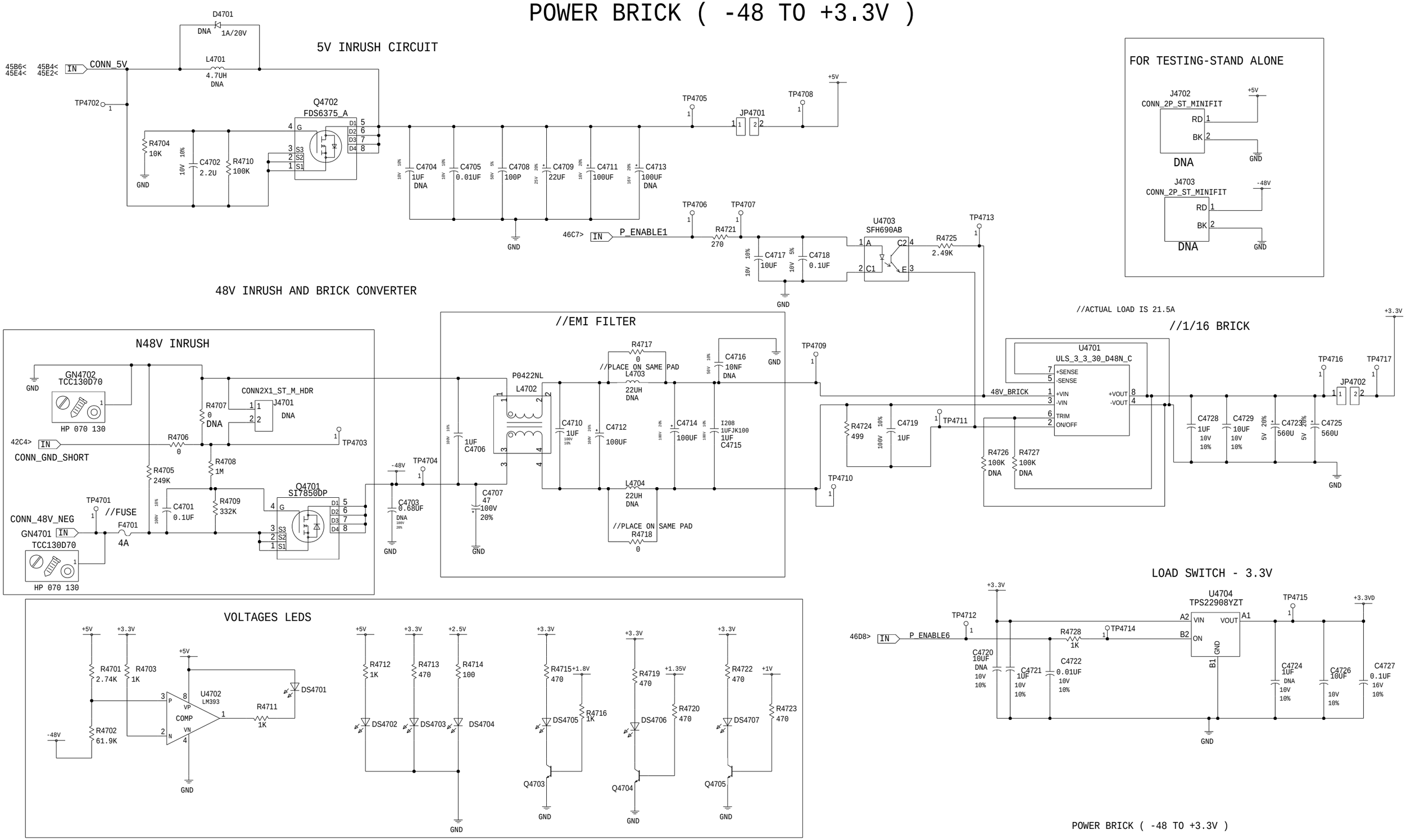

1V(S1VDD) AND 0.675V REGULATORS

VOLTAGE GENERATION				
REFDES	MPN	TYPE	VOLTAGE IN (V)	VOLTAGE OUT (V)
U5001	TPS54519RTE	BUCK	3.3	1.8
U5002	TPS54519RTE	BUCK	3.3	1.35
U4902	TPS54719RTE	BUCK	3.3	1.0
U4901	TPS54719RTE	BUCK	3.3	2.5
U4801	TPS51206DSQ	LDO	1.35	0.675
U4704	TPS22908YZT	LOAD SWITCH	3.3	3.3
U4802	TPS7A7100RGT	LDO	1.8	1.0
U5003	TPS22908YZT	LOAD SWITCH	1.8	1.8

POWER UP ORDER	ENABLE SIGNAL	VOLTAGE RAILS
1	P_ENABLE1	+3.3V
2	P_ENABLE2	+1.8V,+2.5V
3	P_ENABLE3	+1.0V,S1VDD
4	P_ENABLE4	+1.35V
5	P_ENABLE5	+1.8VD
6	P_ENABLE6	+3.3VD

DDR TERMINATION REGULATOR 1.35V --> 0.675V @ 1.1A

//ACTUAL LOAD IS 0.71A

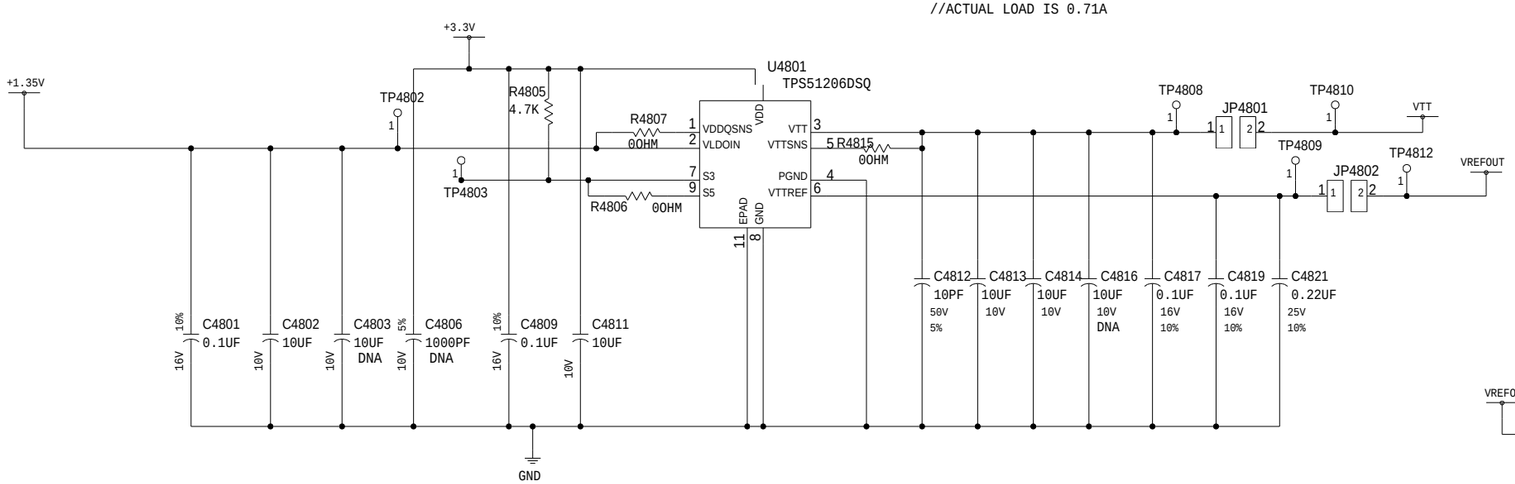

POWER DOWN ORDER	ENABLE SIGNAL	VOLTAGE RAILS
1:	P_ENABLE6	+3.3VD
2:	P_ENABLE5,P_ENABLE4, P_ENABLE2,P_ENABLE1	+1.8VD,+1.35V, VTT,S1VDD,+3.3V, +1.8V,+2.5V
3:	P_ENABLE3	+1.0V

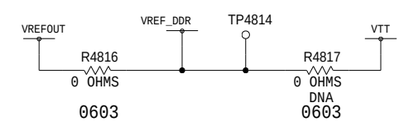

LDO 1.8V --> 1V (S1VDD) @ 400MA

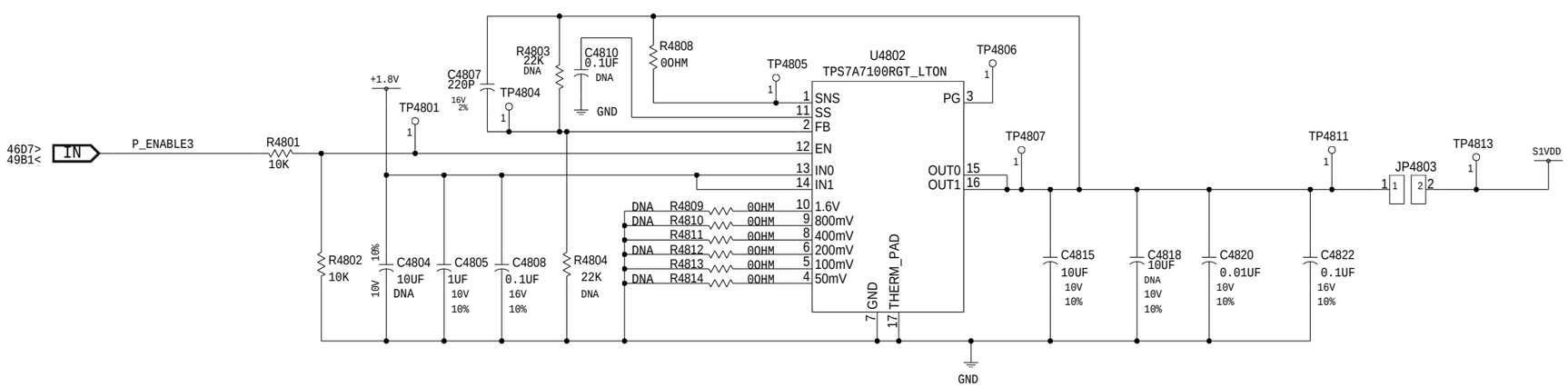

1V (VCORE), 2.5V REGULATORS

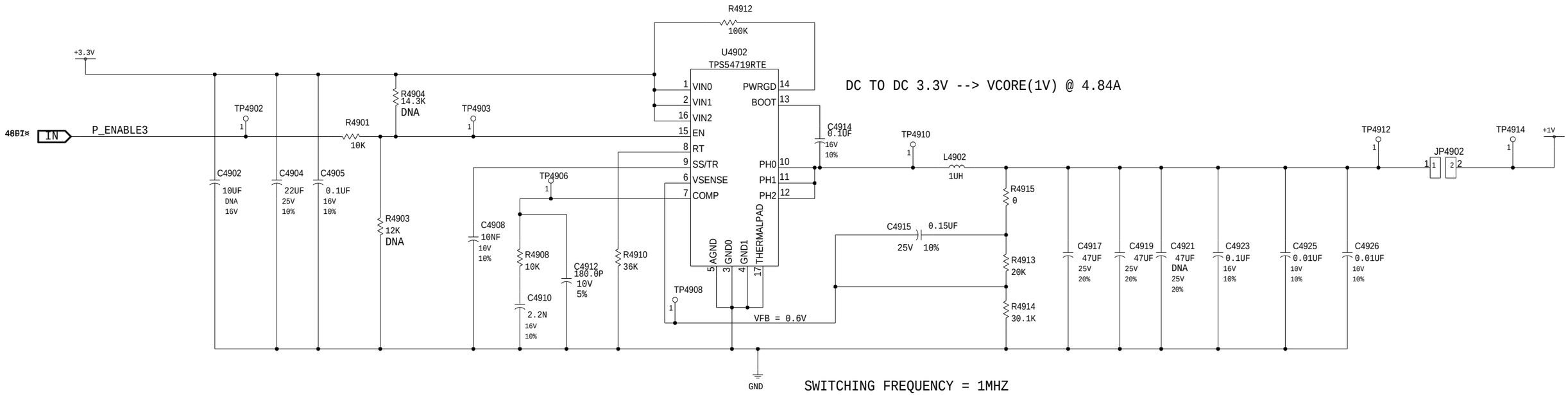

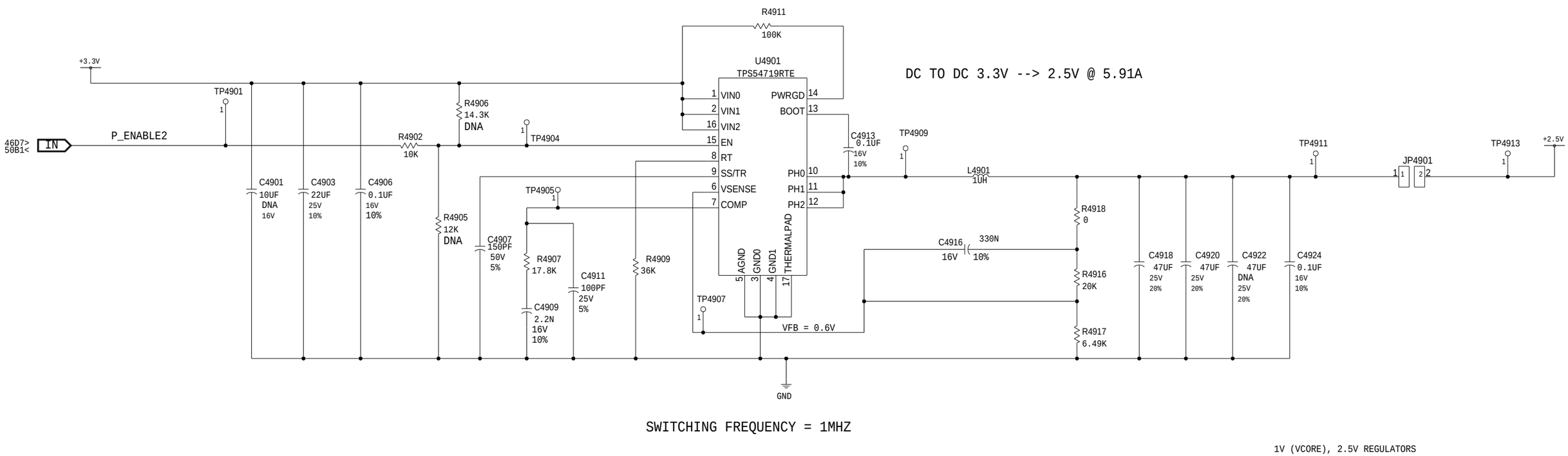

1.8V, 1.35V REGULATORS

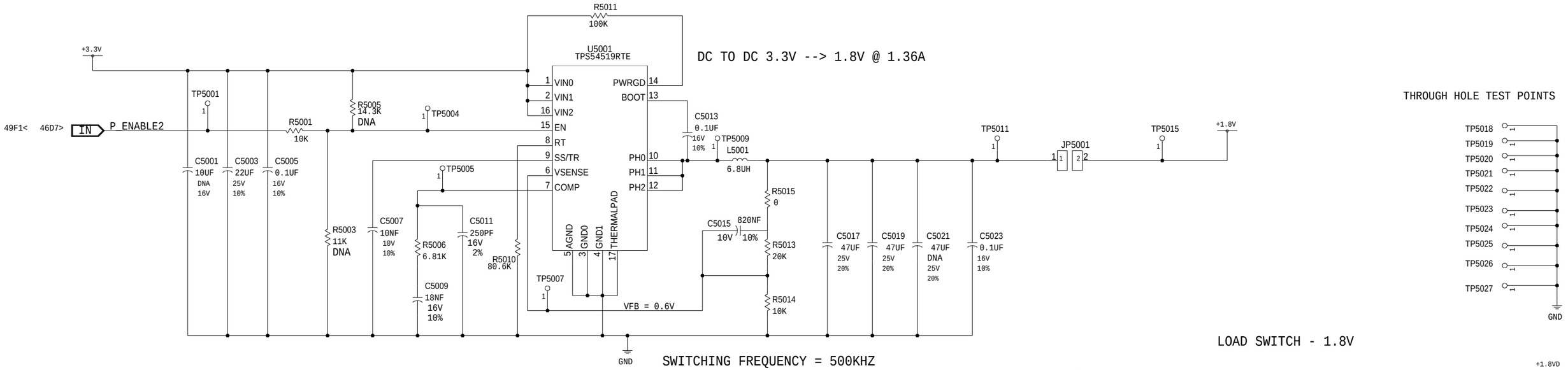

THROUGH HOLE TEST POINTS
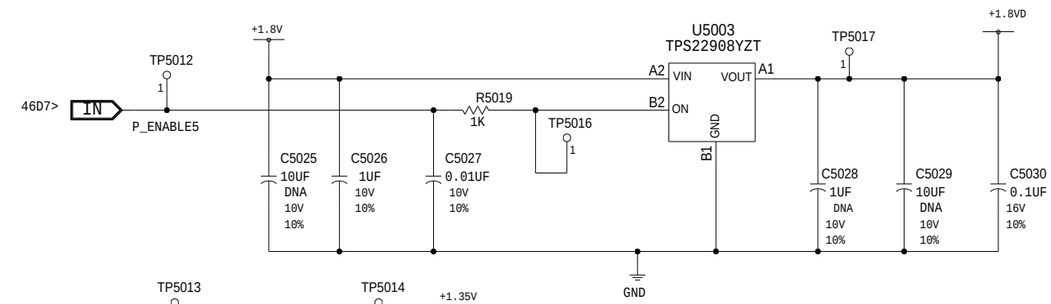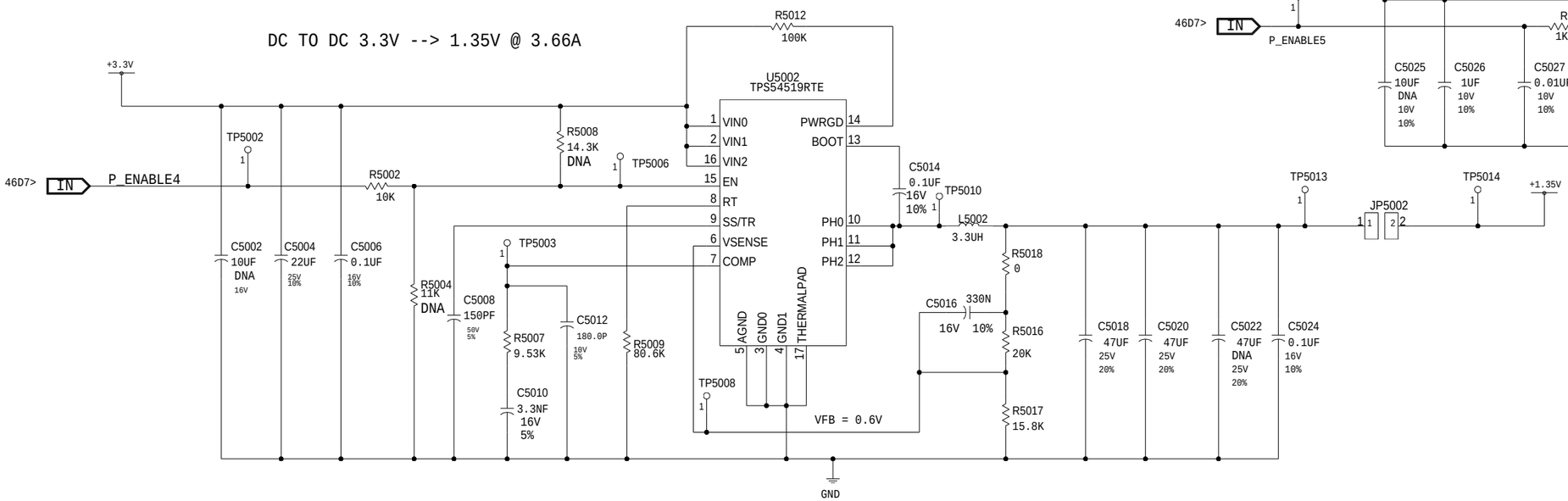
LOAD SWITCH - 1.8V