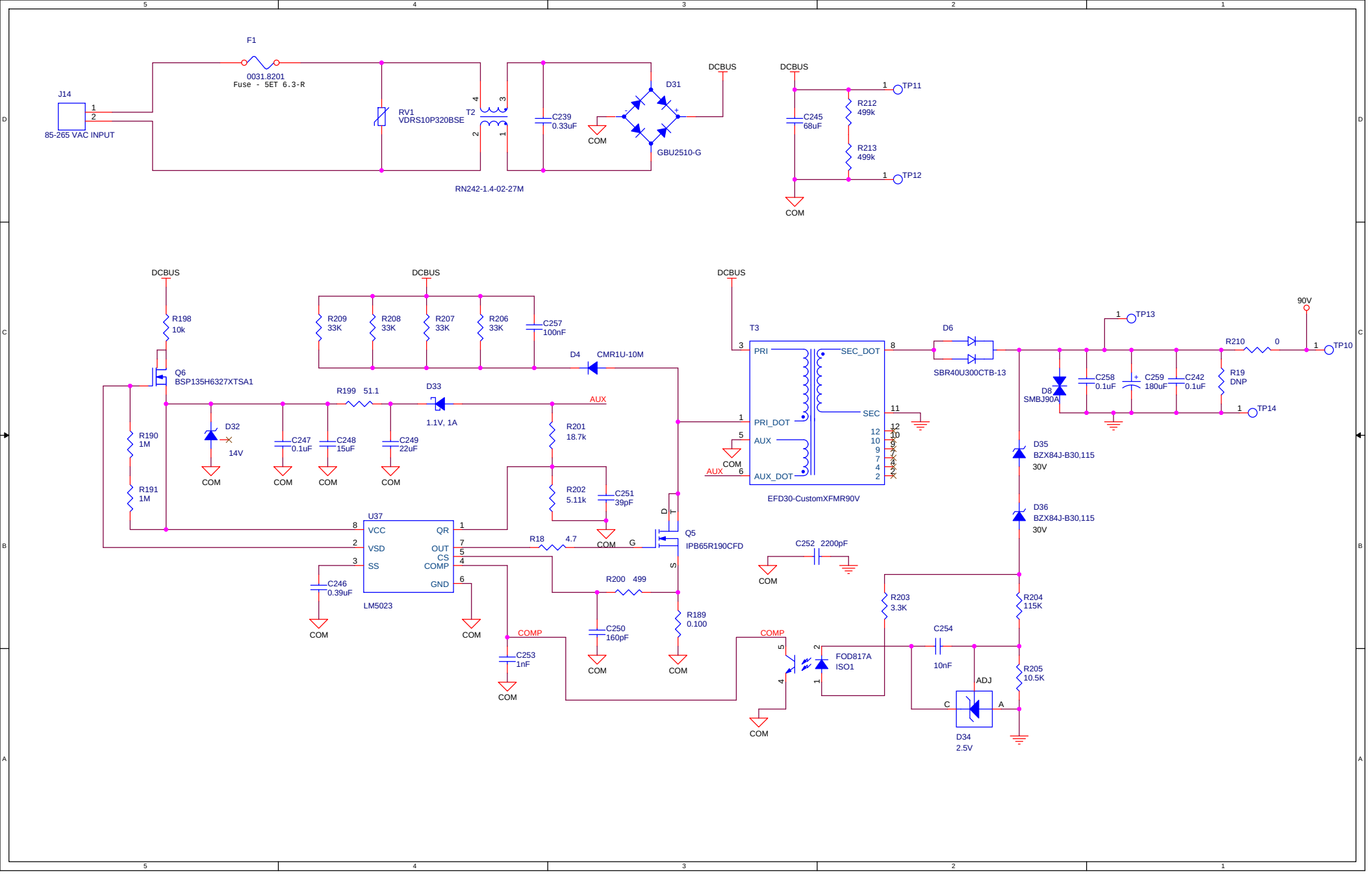
F1
0031.8201
Fuse - 5ET 6.3-R
J14
85-265 VAC INPUT
RV1
VDRS10P320BSE
T2
RN242-1.4-02-27M
C239
0.33uF
COM
D31
GBU2510-G
DCBUS
C245
68uF
R212
499k
R213
499k
TP11
TP12
R198
10k
Q6
BSP135H6327XTSA1
R190
1M
R191
1M
D32
14V
C247
0.1uF
C248
15uF
C249
22uF
R199 51.1
D33
1.1V, 1A
AUX
R209
33K
R208
33K
R207
33K
R206
33K
C257
100nF
D4
CMR1U-10M
R201
18.7k
R202
5.11k
C251
39pF
U37
VCC
VSD
SS
QR
OUT
CS
COMP
GND
LM5023
C246
0.39uF
R18 4.7
Q5
IPB65R190CFD
R200 499
C250
160pF
R189
0.1100
C253
1nF
COMP
T3
PRI
PRI_DOT
AUX
AUX_DOT
SEC_DOT
SEC
EFD30-CustomXFMR90V
D6
SBR40U300CTB-13
C252 2200pF
R203
3.3K
FOD817A
ISO1
C254
10nF
ADJ
D34
2.5V
R204
115K
R205
10.5K
D35
BZX84J-B30,115
30V
D36
BZX84J-B30,115
30V
D8
SMBJ90A
C258
0.1uF
C259
180uF
C242
0.1uF
R19
DNP
R210 0
90V
TP13
TP14
TP10