POWER - PMIC

Capacitors 가능한 U57근접하게 위치

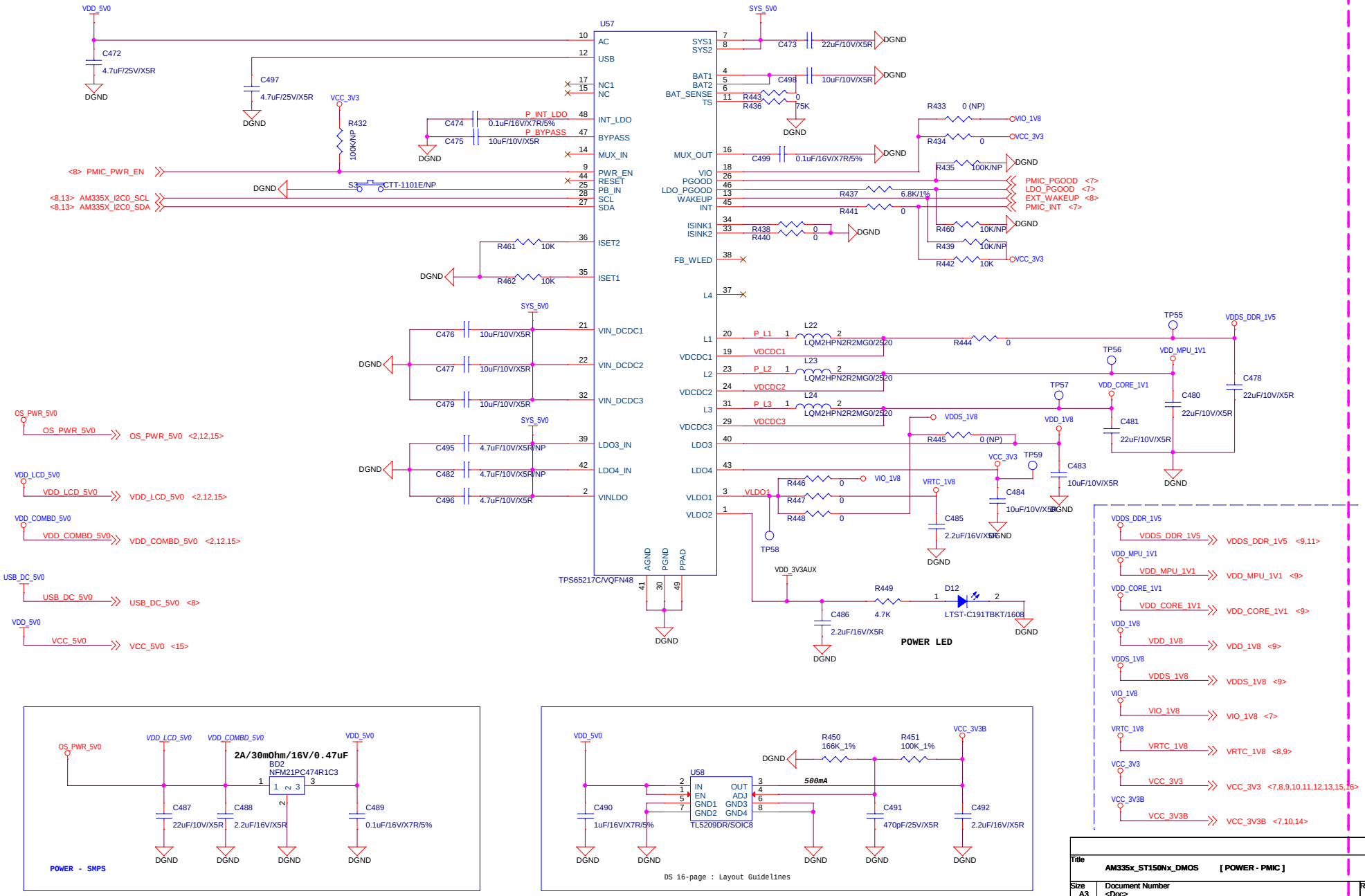

Title	AM335x_ST150Nx_DMOS [POWER - PMIC]	
Size A3	Document Number <Doc>	Rev 2.0
Date: Friday, January 13, 2017	Sheet 17 of 18	

PDF created with pdfFactory Pro trial version www.pdffactory.com