PDF-XChange Editor
Click to BUY NOW!
www.tracker-software.com

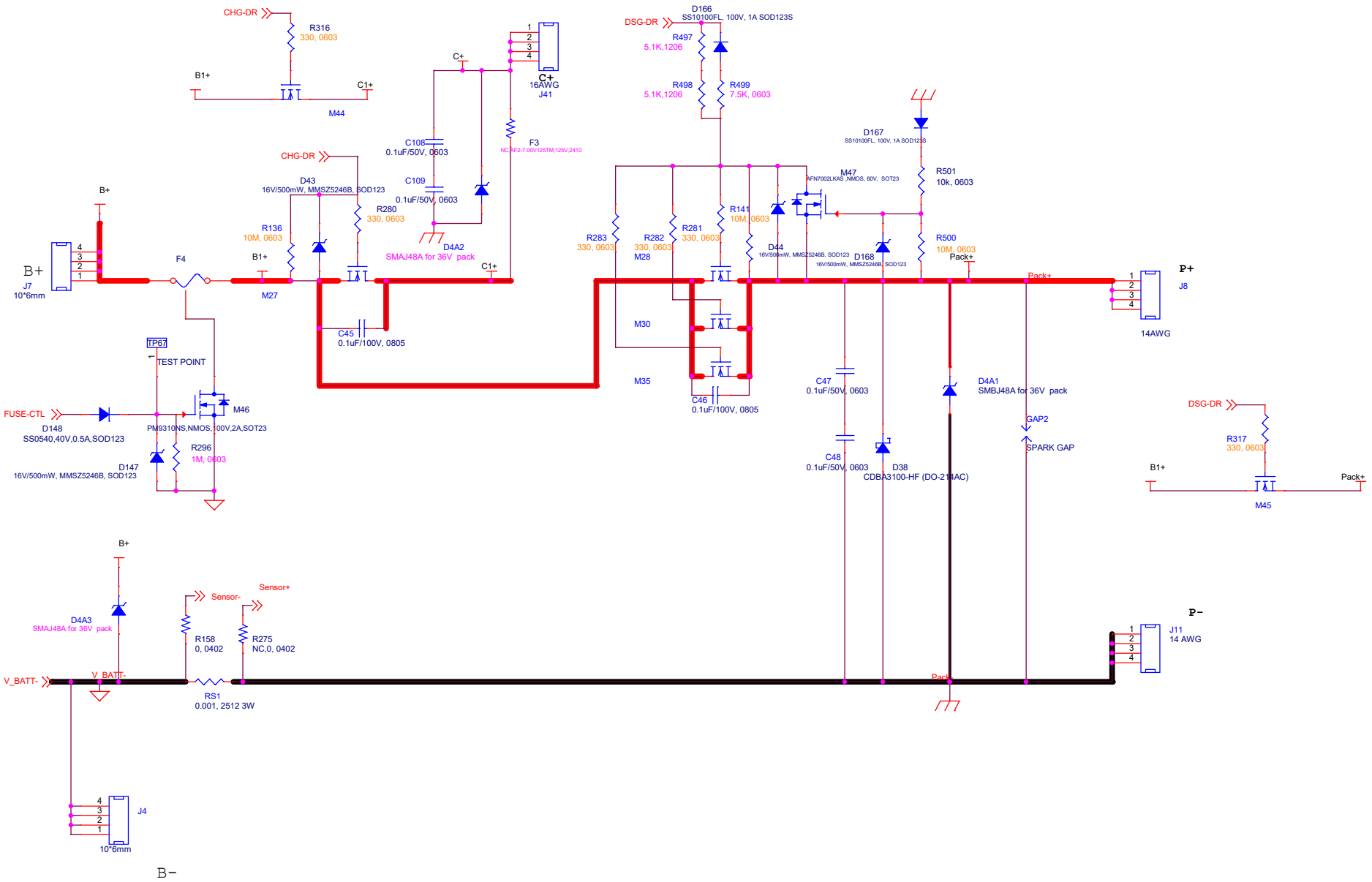

PDF-XChange Editor
Click to BUY NOW!
www.tracker-software.com

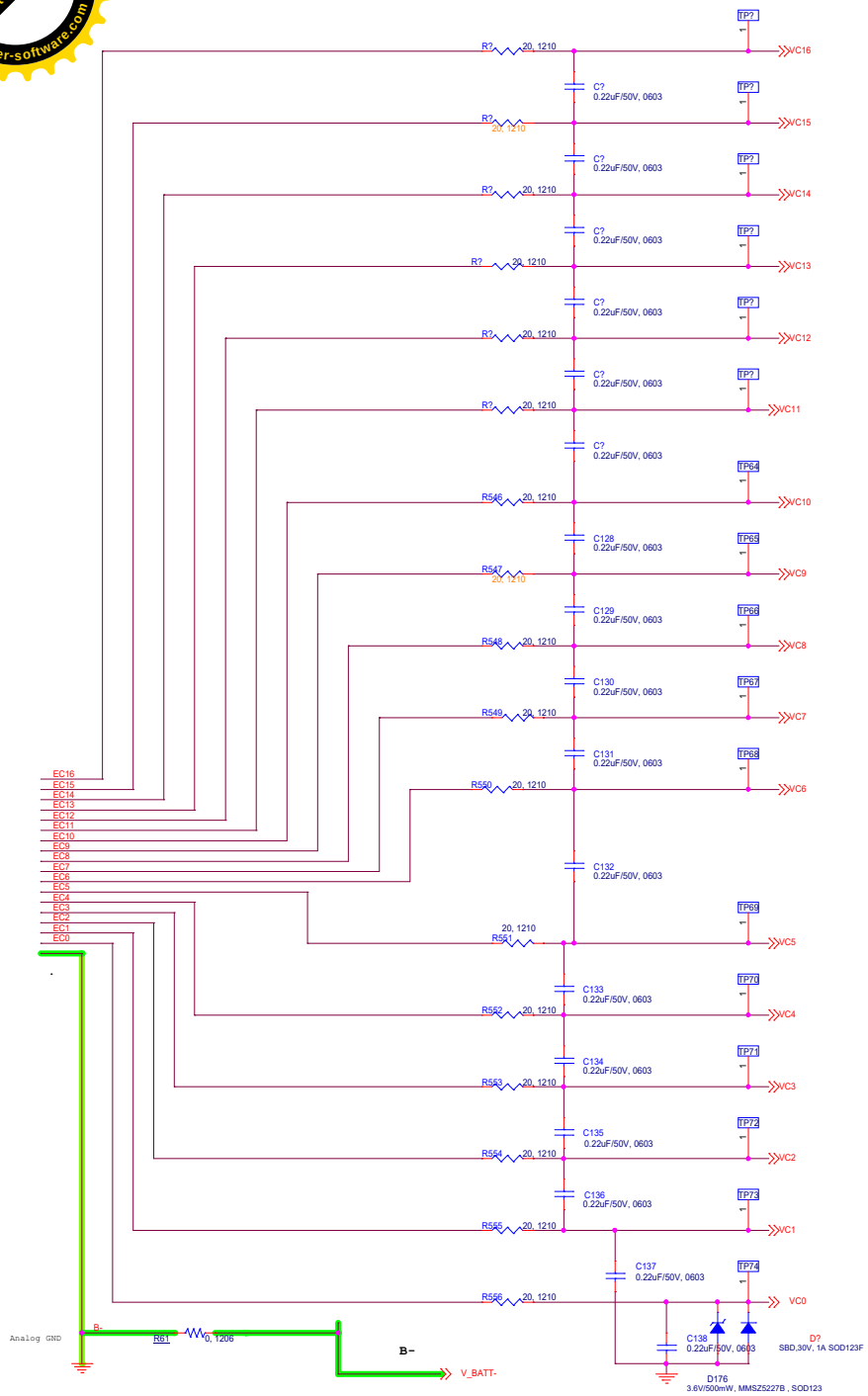

Title	Cell voltage detection circuit	
Size C	Document Number	Rev V1.0
Date: Friday, December 02, 2022	Sheet 4 of 11	

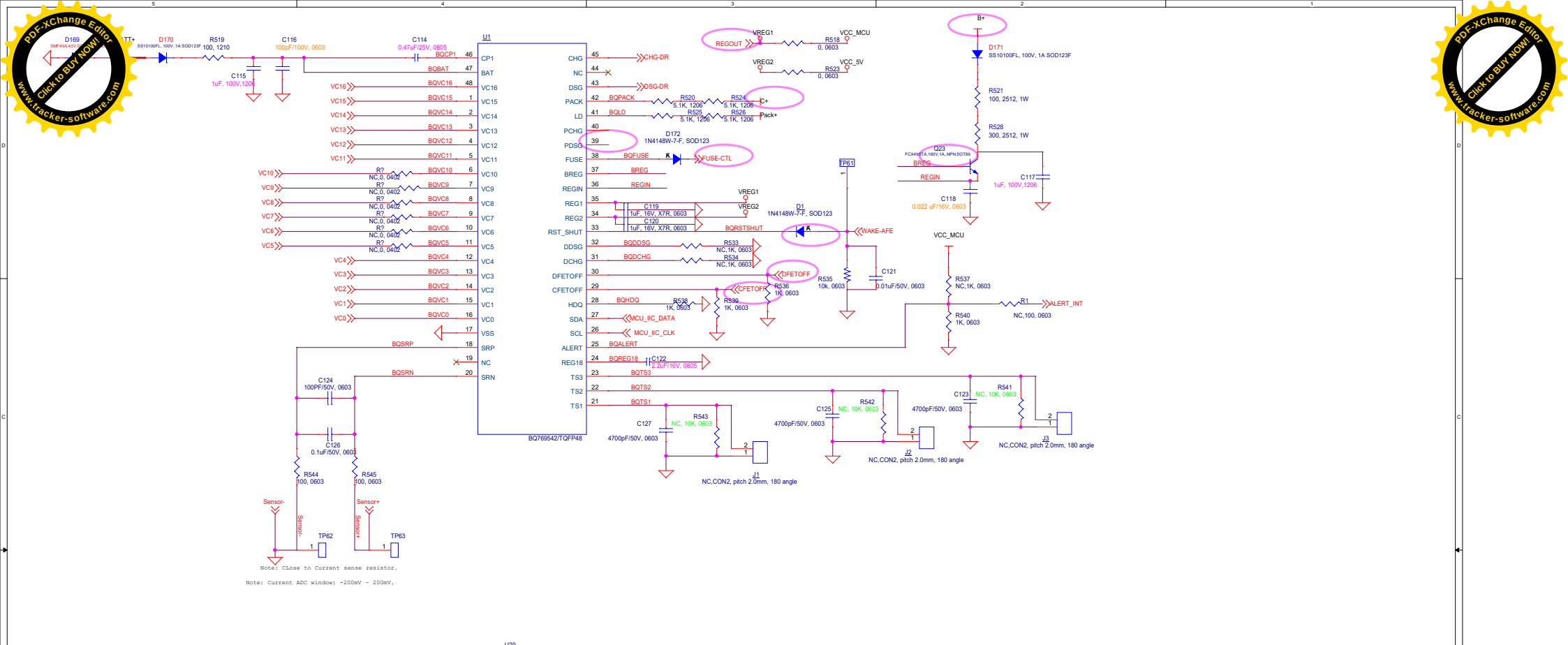

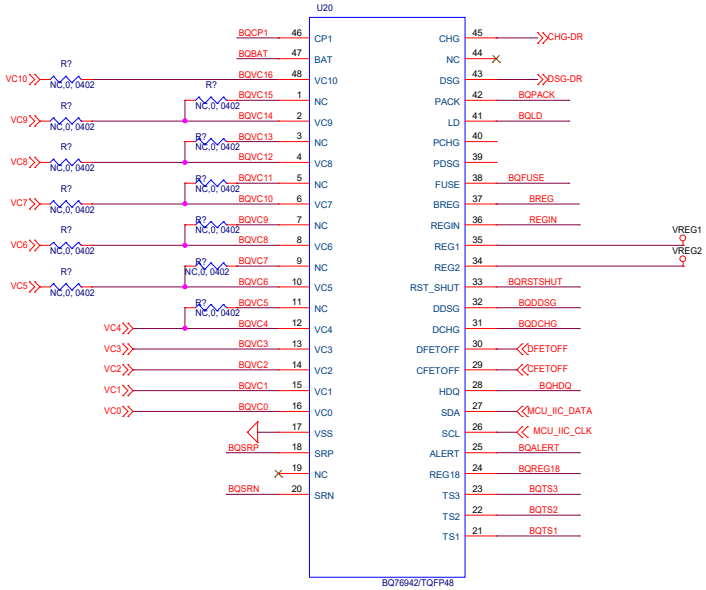

Title	AFE circuit	
Size C	Document Number	Rev V1.0
Date: Friday, December 02, 2022	Sheet 3 of 11	

PDF-XChange Editor
Click to BUY NOW!
www.tracker-software.com