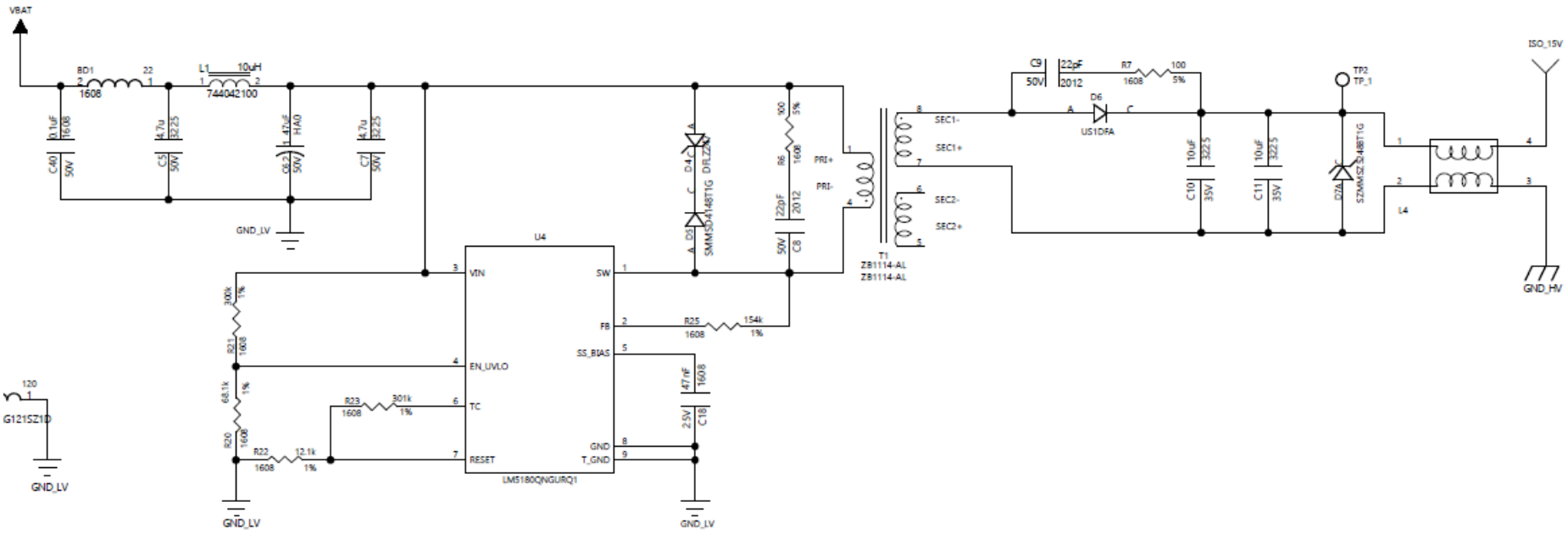Schematic_LM5180