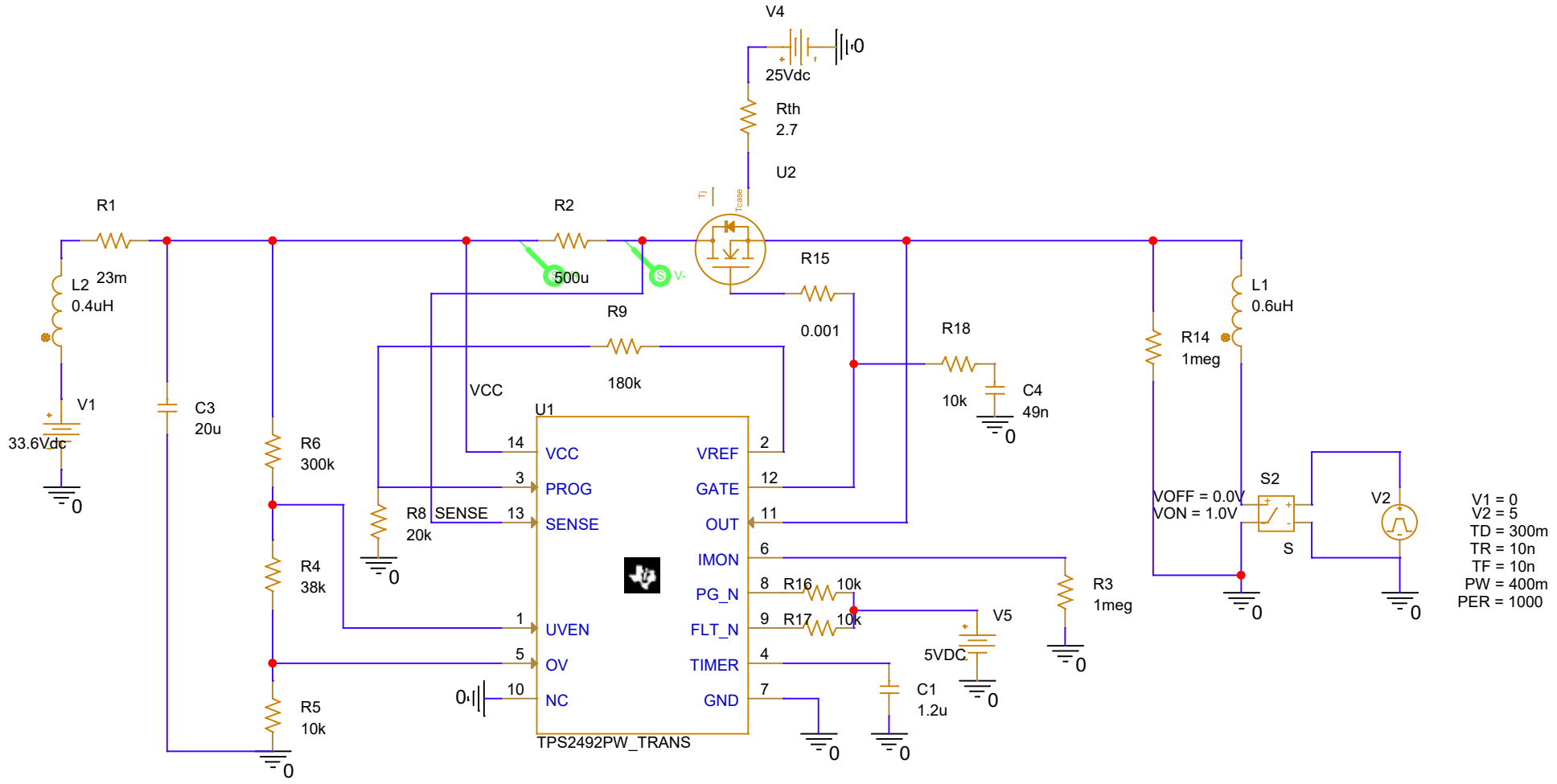

Title	<Short-Circuit Test TPS2492>	
Size A	Document Number <Doc>	Rev <RevCode>
Date: Sunday, May 22, 2022	Sheet 1 of 1	