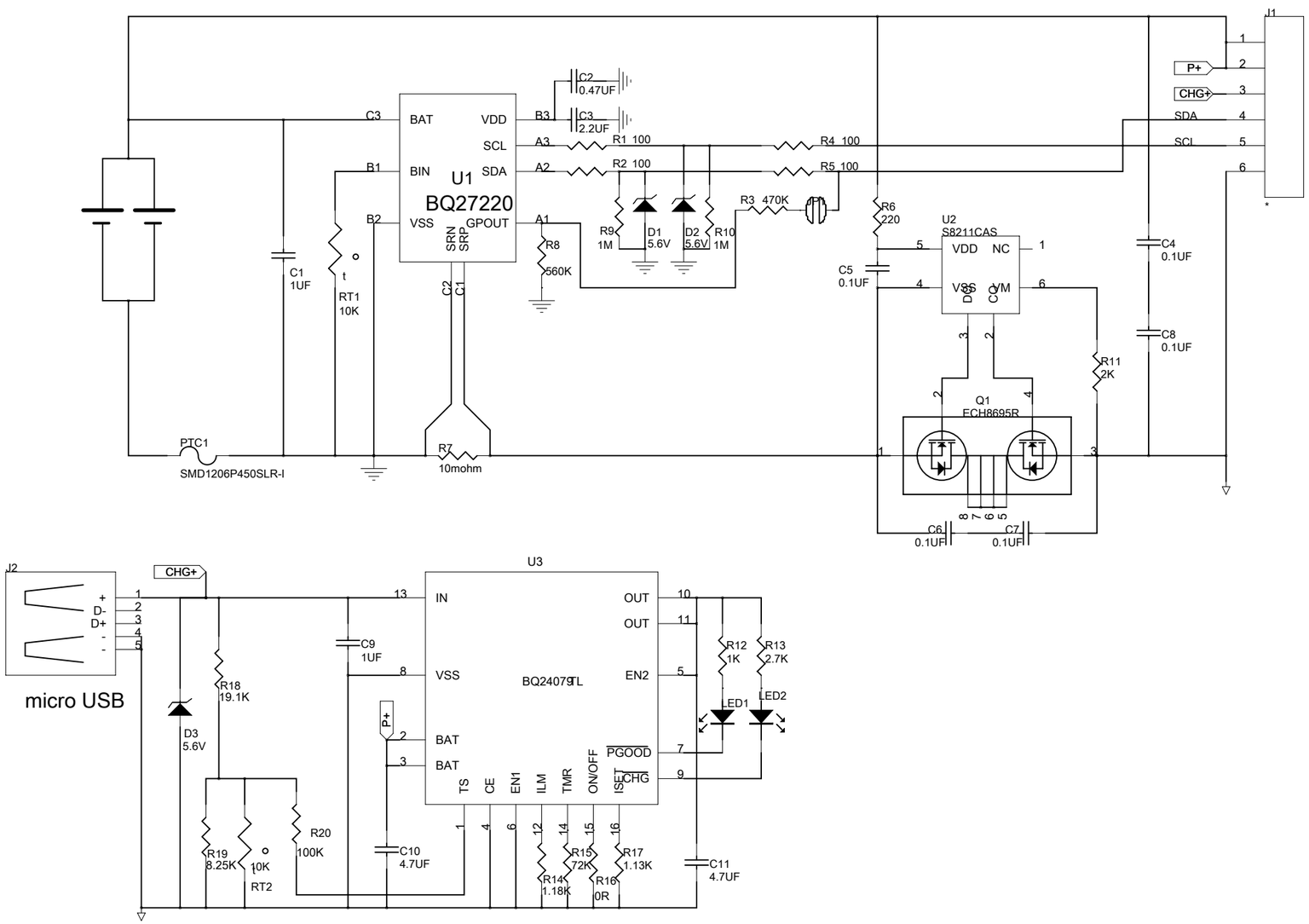

Title		
Size	Number	Revision
Date:	Sheet of	
File:	Drawn By:	