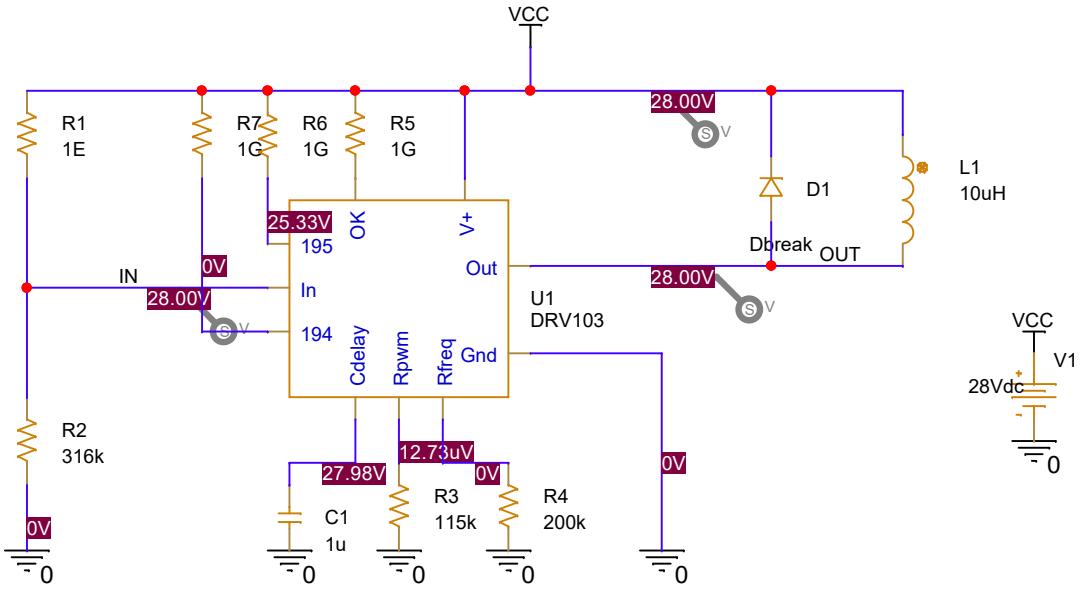

GND_0

Copy and paste the GND_0 circle in order to connect the Analog GND to the appropriate wires in your circuit.

Title	<Title>	
Size A	Document Number <Doc>	Rev <RevCode>
Date: Friday, August 05, 2022	Sheet 1 of 1	