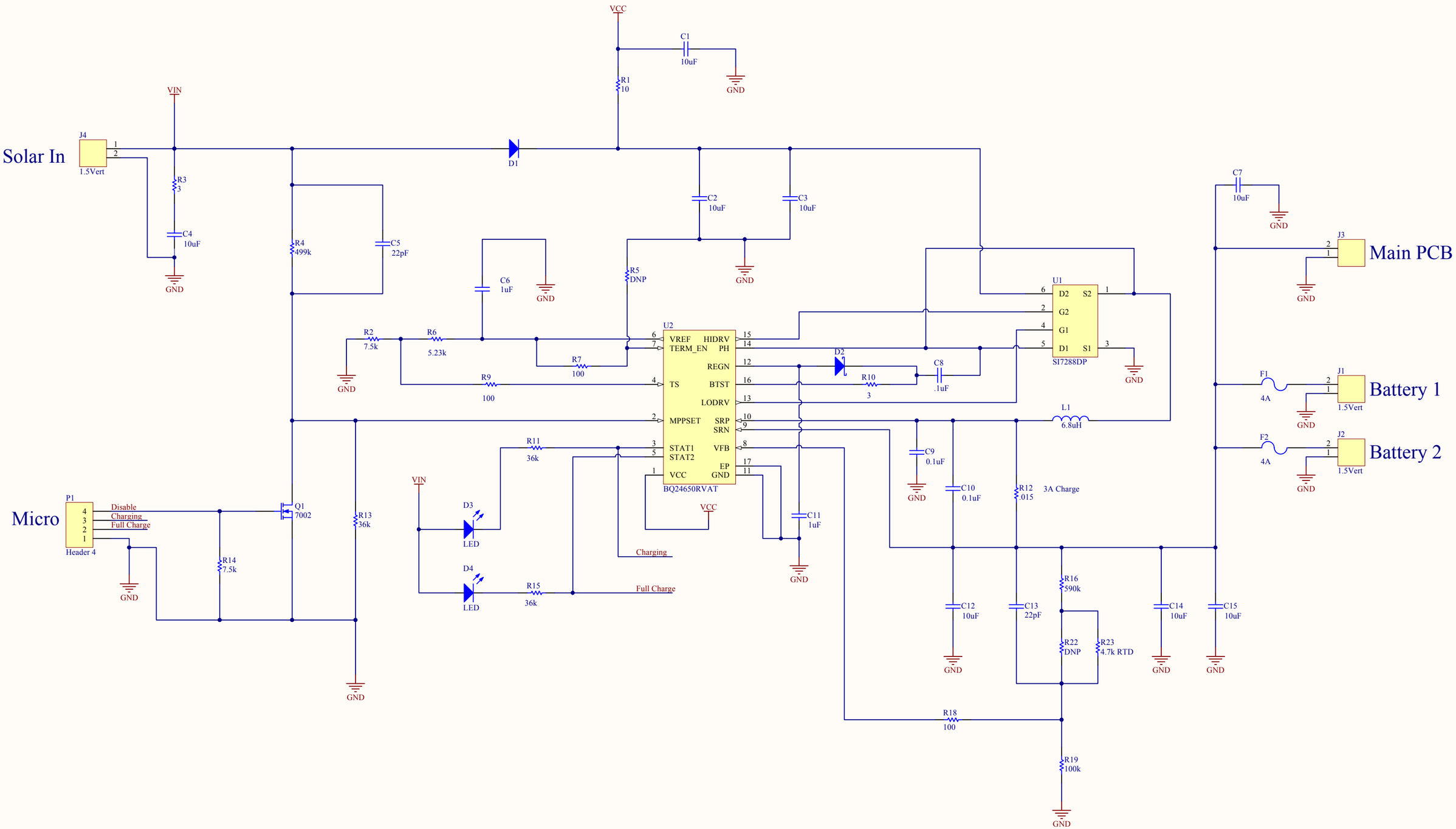

Title: SmartTempSensor-PWR	
Revision: R1E1	Size: 11x17 (tabloid)
Drawn: Derek Meng	Status: INTERNAL ONLY
Date: 26/01/2017	Schematic sheet 1 of 1
File: Solar R2E2.SchDoc	

pure TECHNOLOGIES
3rd floor, 705 - 11th Avenue S.W.
Calgary, Alberta, Canada, T2R 0E3
1.800.537.2806 1.403.266.6794