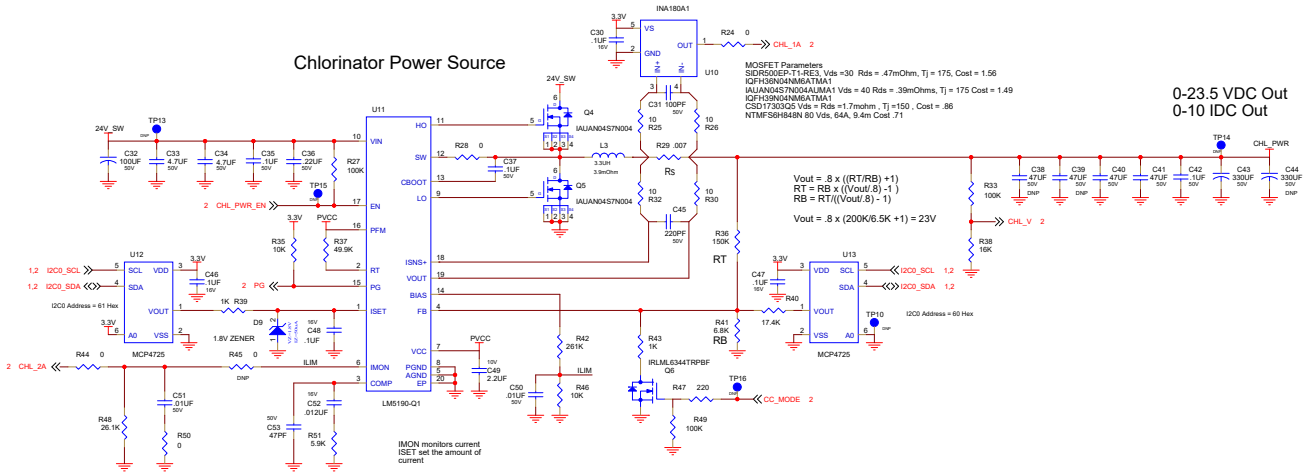Chlorinator Power Source