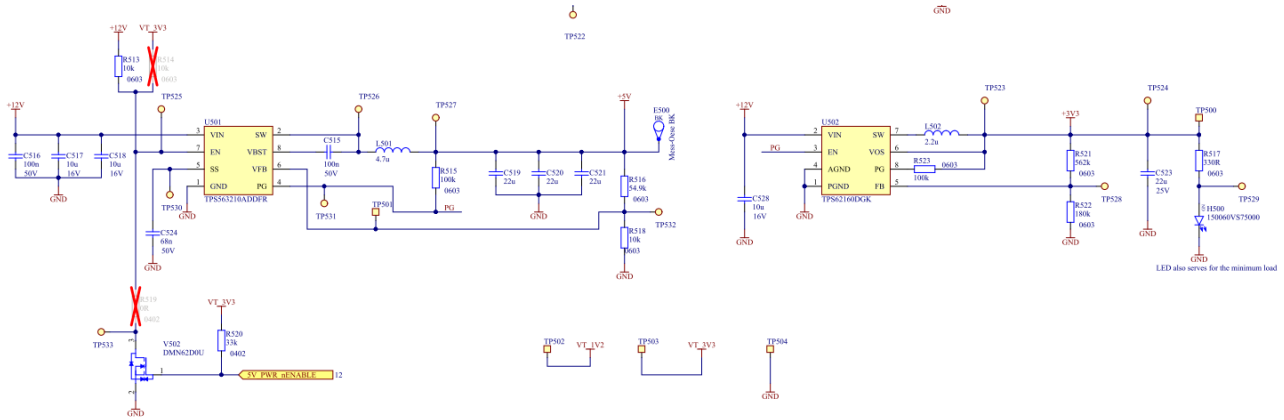
U501
TPS63210ADDFR
U502
TPS62160DGK
LED also serves for the minimum load

TOP VIEW

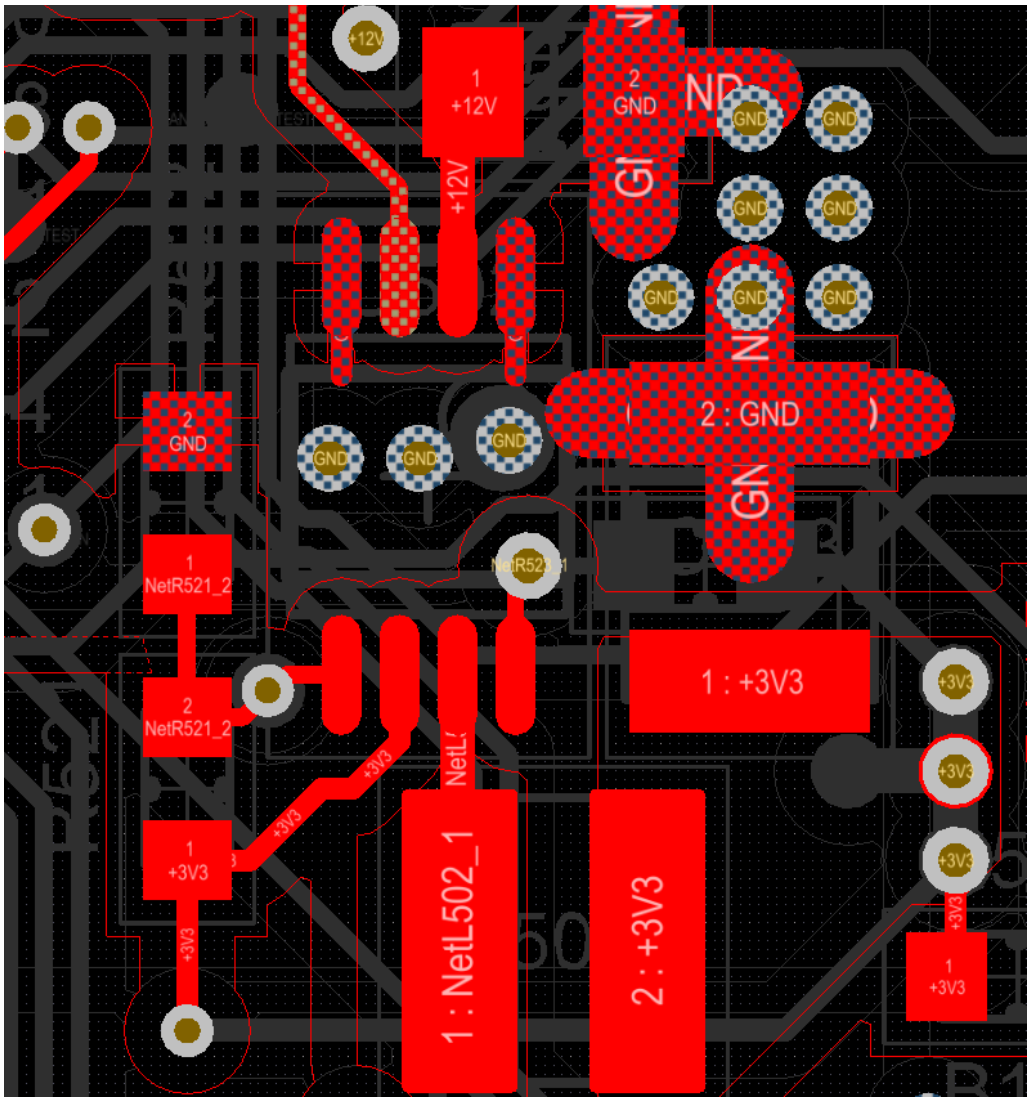
1
+12V
2
GND
1 : +3V3
1 : NetL502_1
2 : +3V3
2 : GND
1
NetR521_2
2
NetR521_2
1
+3V3

BOTTOM VIEW

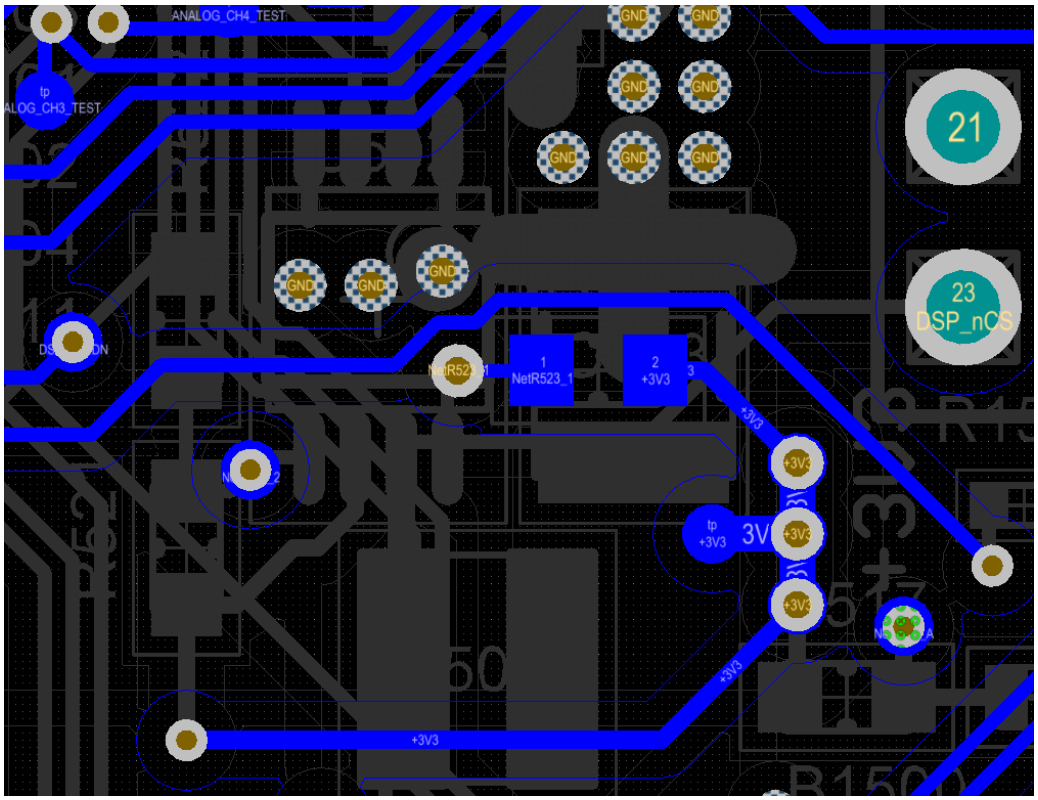
ANALOG_CH4_TEST
tp
ALOG_CH3_TEST
GND
21
23
DSP_nCS
1
NetR523_1
2
+3V3
tp
+3V3
3V
+3V3
50