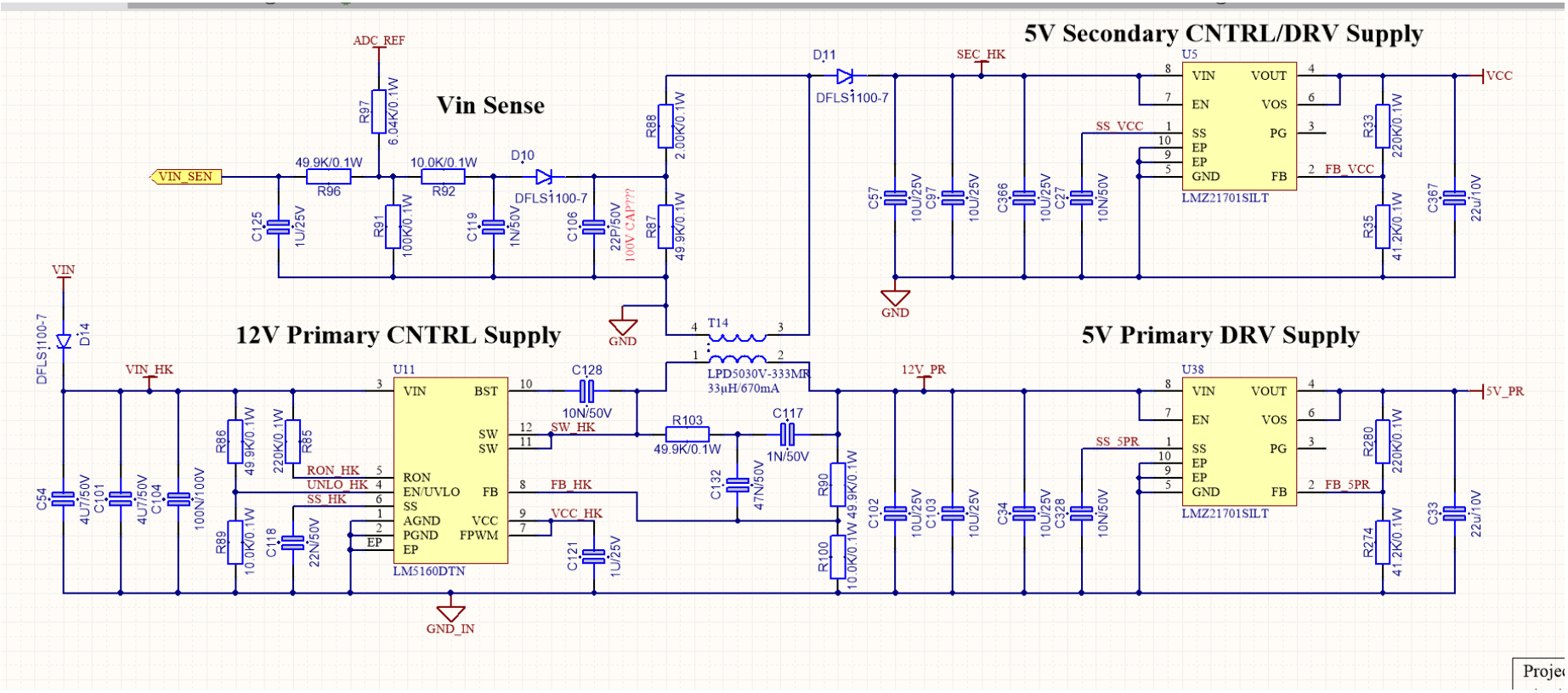
Vin Sense
5V Secondary CNTRL/DRV Supply
12V Primary CNTRL Supply
5V Primary DRV Supply
ADC_REF
VIN_SEN
VIN
VCC
5V_PR
12V_PR
SEC_HK
SS_VCC
FB_VCC
SS_5PR
FB_5PR
VIN_HK
RON_HK
UNLO_HK
SS_HK
SW_HK
FB_HK
VCC_HK
GND
GND_IN
U5
LMZ21701SILT
U11
LM5160DTN
U38
LMZ21701SILT
T14
LPD5030V-333MR
33µH/670mA
DFLS1100-7
D10
D11
D14
R96 49.9K/0.1W
R92 10.0K/0.1W
R97 6.04K/0.1W
R91 100K/0.1W
R88 2.00K/0.1W
R87 49.9K/0.1W
R33 220K/0.1W
R35 41.2K/0.1W
R280 220K/0.1W
R274 41.2K/0.1W
R86 49.9K/0.1W
R85 220K/0.1W
R89 10.0K/0.1W
R103 49.9K/0.1W
R90 49.9K/0.1W
R100 10.0K/0.1W
C125 1U/25V
C119 1N/50V
C106 22P/50V
100V CAP??
C128 10N/50V
C117 1N/50V
C132 47N/50V
C121 1U/25V
C118 22N/50V
C54 4U7/50V
C101 4U7/50V
C104 100N/100V
C57 10U/25V
C97 10U/25V
C366 10U/25V
C27 10N/50V
C367 22u/10V
C102 10U/25V
C103 10U/25V
C34 10U/25V
C328 10N/50V
C33 22u/10V