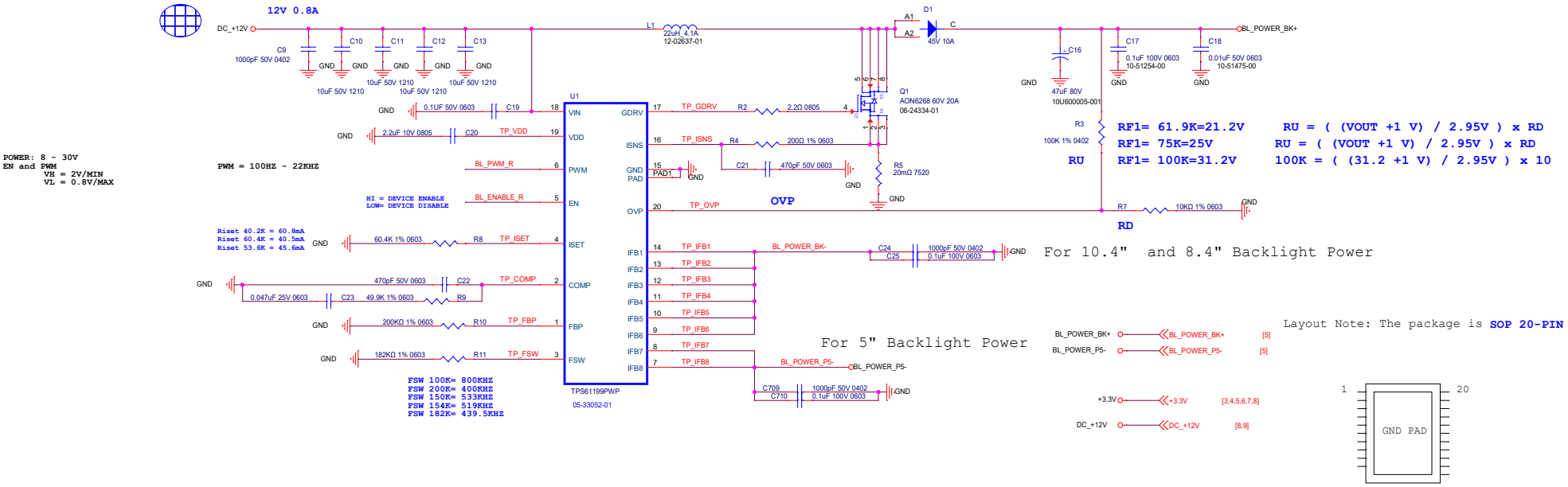BACKLIGHT POWER