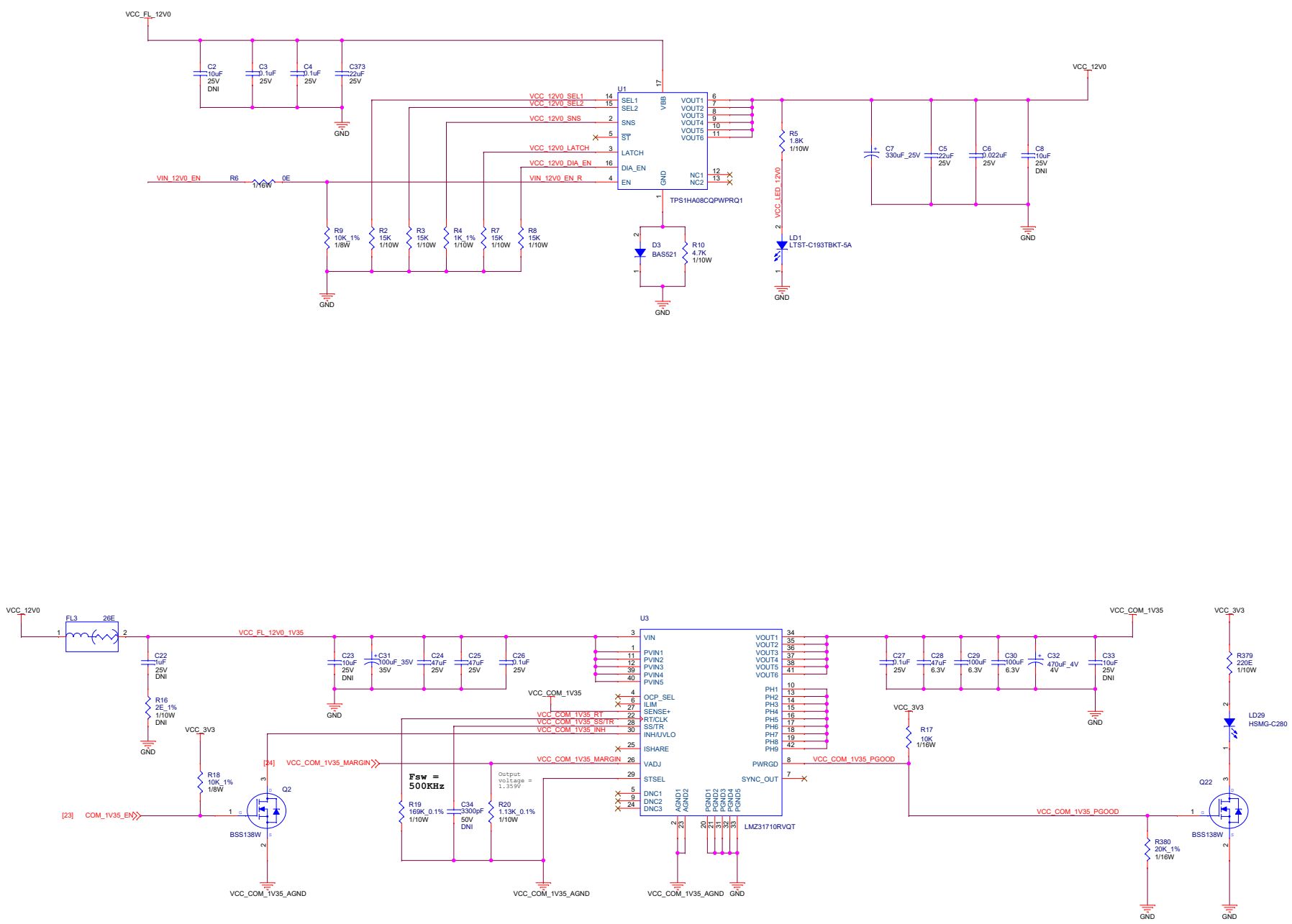
VCC_FL_12V0
C2 10uF 25V DNI
C3 0.1uF 25V
C4 0.1uF 25V
C373 22uF 25V
GND
U1
TPS1HA08CQPWPRQ1
VCC_12V0_SEL1
VCC_12V0_SEL2
VCC_12V0_SNS
VCC_12V0_LATCH
VCC_12V0_DIA_EN
VIN_12V0_EN_R
VIN_12V0_EN
R6 0E 1/16W
R9 10K_1% 1/8W
R2 15K 1/10W
R3 15K 1/10W
R4 1K_1% 1/10W
R7 15K 1/10W
R8 15K 1/10W
D3 BAS521
R10 4.7K 1/10W
R5 1.8K 1/10W
VCC_LED_12V0
LD1 LTST-C193TBKT-5A
C7 330uF_25V
C5 22uF 25V
C6 0.022uF 25V
C8 10uF 25V DNI
VCC_12V0

VCC_12V0
FL3 26E
VCC_FL_12V0_1V35
C22 1uF 25V DNI
R16 2E_1% 1/10W DNI
C23 10uF 25V DNI
C31 100uF_35V 35V
C24 47uF 25V
C25 47uF 25V
C26 0.1uF 25V
U3
LMZ31710RVQT
VCC_COM_1V35
VCC_COM_1V35_RT
VCC_COM_1V35_SS/TR
VCC_COM_1V35_INH
VCC_COM_1V35_MARGIN
VCC_COM_1V35_PGOOD
[24] VCC_COM_1V35_MARGIN
[23] COM_1V35_EN
VCC_3V3
R18 10K_1% 1/8W
Q2 BSS138W
Fsw = 500KHz
R19 169K_0.1% 1/10W
C34 3300pF 50V DNI
R20 1.13K_0.1% 1/10W
Output voltage = 1.359V
VCC_COM_1V35_AGND
C27 0.1uF 25V
C28 47uF 6.3V
C29 100uF 6.3V
C30 100uF 6.3V
C32 470uF_4V 4V
C33 10uF 25V DNI
R17 10K 1/16W
R380 20K_1% 1/16W
Q22 BSS138W
R379 220E 1/10W
LD29 HSMG-C280
VCC_3V3

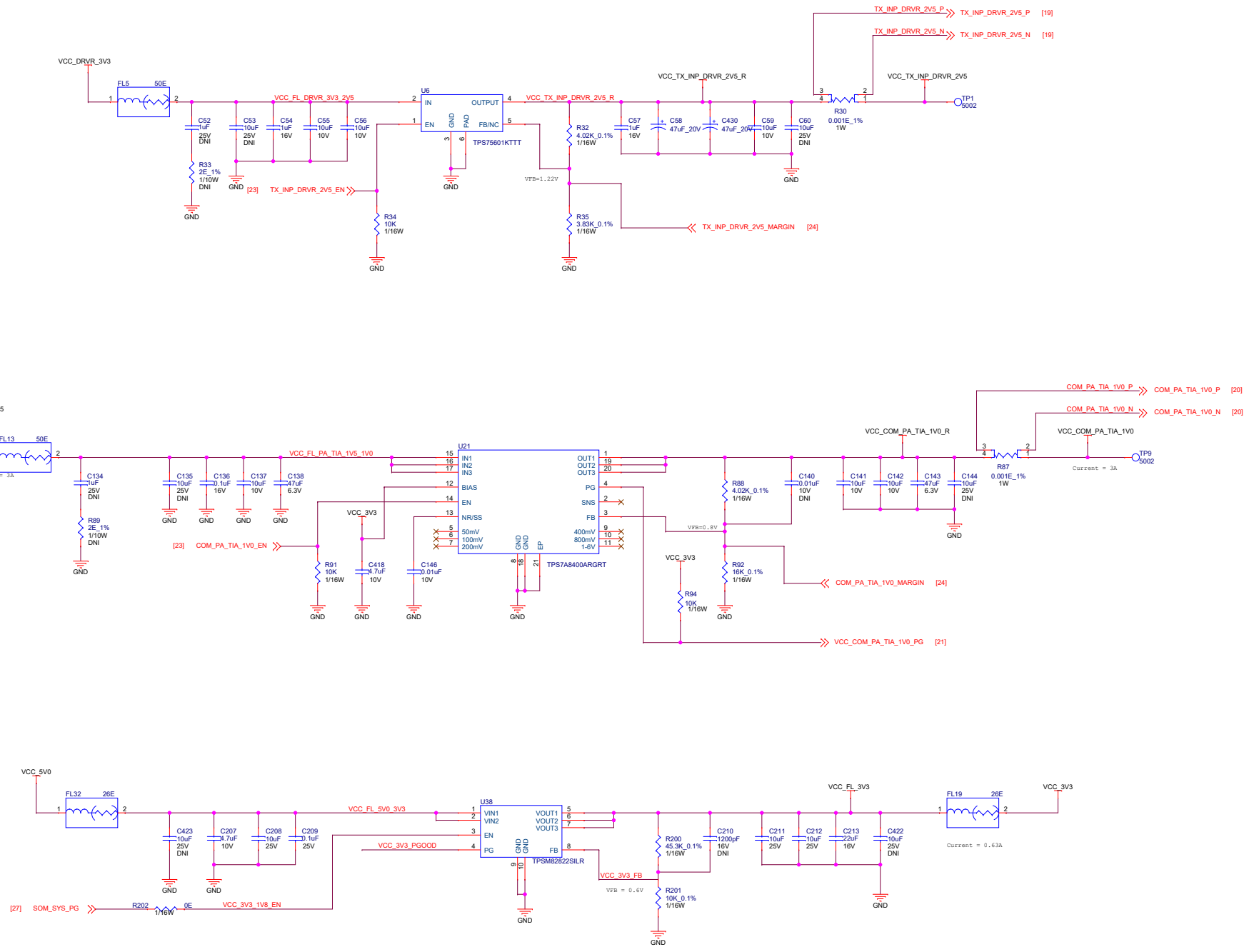
VCC_DRVR_3V3
FL5 50E
C52 1uF 25V DNI
C53 10uF 25V DNI
C54 1uF 16V
C55 10uF 10V
C56 10uF 10V
R33 2E_1% 1/10W DNI
GND
[23] TX_INP_DRVR_2V5_EN
R34 10K 1/16W
VCC_FL_DRVR_3V3_2V5
U6
IN
OUTPUT
EN
GND
PAD
FB/NC
TPS75601KTTT
VCC_TX_INP_DRVR_2V5_R
R32 4.02K_0.1% 1/16W
VFB=1.22V
R35 3.83K_0.1% 1/16W
TX_INP_DRVR_2V5_MARGIN [24]
C57 1uF 16V
C58 47uF_20V
C430 47uF_20V
C59 10uF 10V
C60 10uF 25V DNI
R30 0.001E_1% 1W
TX_INP_DRVR_2V5_P
TX_INP_DRVR_2V5_P [19]
TX_INP_DRVR_2V5_N
TX_INP_DRVR_2V5_N [19]
VCC_TX_INP_DRVR_2V5
TP1 5002
VCC_COM_1V5
FL13 50E
Current = 3A
C134 1uF 25V DNI
R89 2E_1% 1/10W DNI
C135 10uF 25V DNI
C136 0.1uF 16V
C137 10uF 10V
C138 47uF 6.3V
VCC_FL_PA_TIA_1V5_1V0
U21
IN1
IN2
IN3
BIAS
EN
NR/SS
50mV
100mV
200mV
OUT1
OUT2
OUT3
PG
SNS
FB
400mV
800mV
1-6V
TPS7A8400ARGRT
[23] COM_PA_TIA_1V0_EN
VCC_3V3
R91 10K 1/16W
C418 4.7uF 10V
C146 0.01uF 10V
VFB=0.8V
R88 4.02K_0.1% 1/16W
R92 16K_0.1% 1/16W
R94 10K 1/16W
COM_PA_TIA_1V0_MARGIN [24]
VCC_COM_PA_TIA_1V0_PG [21]
C140 0.01uF 10V DNI
C141 10uF 10V
C142 10uF 10V
C143 47uF 6.3V
C144 10uF 25V DNI
VCC_COM_PA_TIA_1V0_R
R87 0.001E_1% 1W
COM_PA_TIA_1V0_P
COM_PA_TIA_1V0_P [20]
COM_PA_TIA_1V0_N
COM_PA_TIA_1V0_N [20]
VCC_COM_PA_TIA_1V0
TP9 5002
VCC_5V0
FL32 26E
C423 10uF 25V DNI
C207 4.7uF 10V
C208 10uF 25V
C209 0.1uF 25V
VCC_FL_5V0_3V3
VCC_3V3_PGOOD
U38
VIN1
VIN2
EN
PG
VOUT1
VOUT2
VOUT3
FB
TPSM82822SILR
VCC_3V3_FB
VFB = 0.6V
R200 45.3K_0.1% 1/16W
R201 10K_0.1% 1/16W
C210 1200pF 16V DNI
C211 10uF 25V
C212 10uF 25V
C213 22uF 16V
C422 10uF 25V DNI
VCC_FL_3V3
FL19 26E
Current = 0.63A
VCC_3V3
[27] SOM_SYS_PG
R202 0E 1/16W
VCC_3V3_1V8_EN

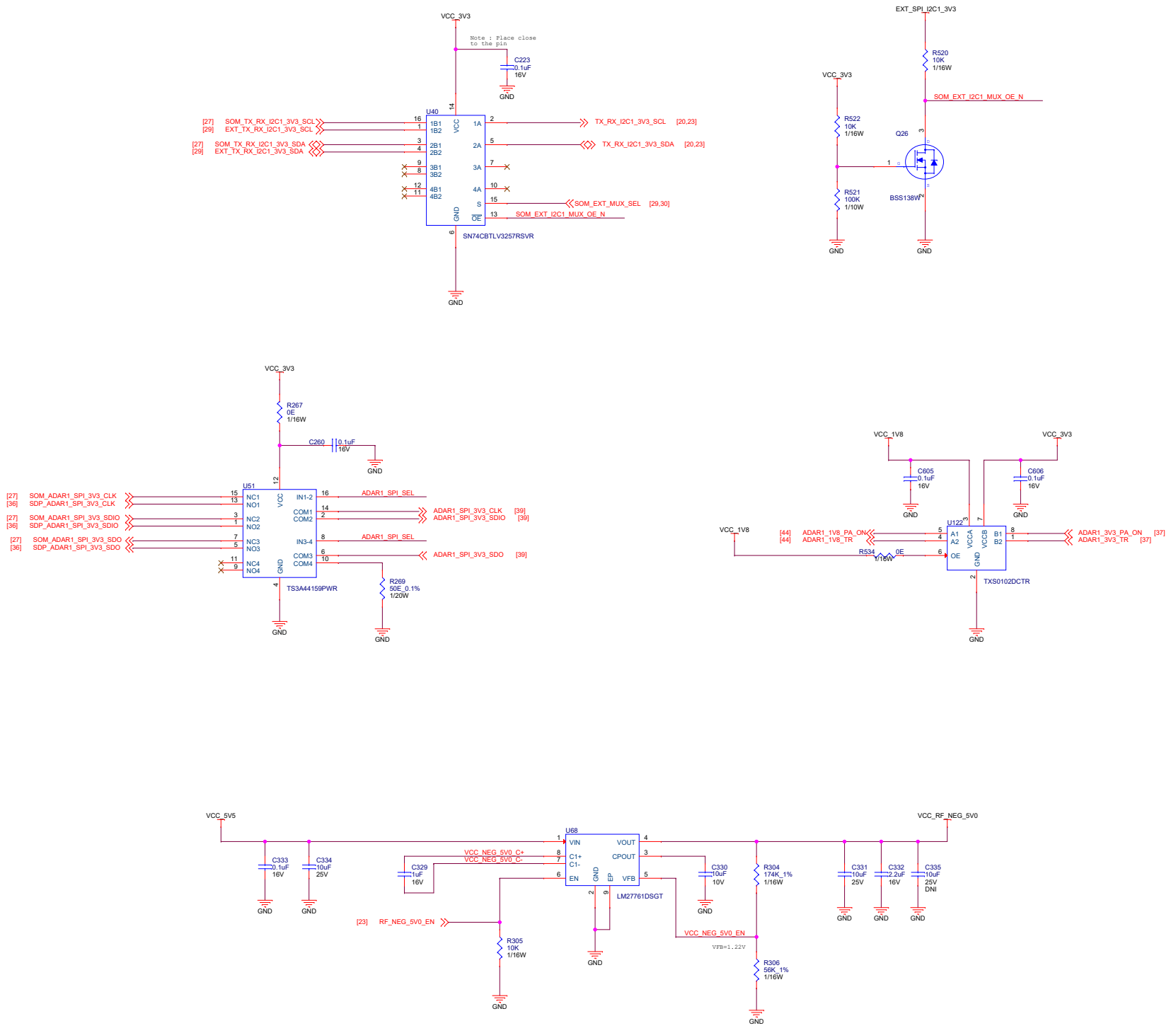
VCC_3V3
Note : Place close to the pin
C223
0.1uF
16V
GND
U40
SN74CBTLV3257RSVR
[27] SOM_TX_RX_I2C1_3V3_SCL
[29] EXT_TX_RX_I2C1_3V3_SCL
[27] SOM_TX_RX_I2C1_3V3_SDA
[29] EXT_TX_RX_I2C1_3V3_SDA
TX_RX_I2C1_3V3_SCL [20,23]
TX_RX_I2C1_3V3_SDA [20,23]
SOM_EXT_MUX_SEL [29,30]
SOM_EXT_I2C1_MUX_OE_N
EXT_SPI_I2C1_3V3
R520
10K
1/16W
SOM_EXT_I2C1_MUX_OE_N
R522
10K
1/16W
Q26
BSS138W
R521
100K
1/10W
VCC_3V3
R267
0E
1/16W
C260
0.1uF
16V
U51
TS3A44159PWR
[27] SOM_ADAR1_SPI_3V3_CLK
[36] SDP_ADAR1_SPI_3V3_CLK
[27] SOM_ADAR1_SPI_3V3_SDIO
[36] SDP_ADAR1_SPI_3V3_SDIO
[27] SOM_ADAR1_SPI_3V3_SDO
[36] SDP_ADAR1_SPI_3V3_SDO
ADAR1_SPI_SEL
ADAR1_SPI_3V3_CLK [39]
ADAR1_SPI_3V3_SDIO [39]
ADAR1_SPI_3V3_SDO [39]
R269
50E_0.1%
1/20W
VCC_1V8
VCC_3V3
C605
0.1uF
16V
C606
0.1uF
16V
U122
TXS0102DCTR
[44] ADAR1_1V8_PA_ON
[44] ADAR1_1V8_TR
R534
0E
1/16W
ADAR1_3V3_PA_ON [37]
ADAR1_3V3_TR [37]
VCC_5V5
VCC_RF_NEG_5V0
U68
LM27761DSGT
VCC_NEG_5V0_C+
VCC_NEG_5V0_C-
C333
0.1uF
16V
C334
10uF
25V
C329
1uF
16V
C330
10uF
10V
R304
174K_1%
1/16W
C331
10uF
25V
C332
2.2uF
16V
C335
10uF
25V
DNI
[23] RF_NEG_5V0_EN
R305
10K
1/16W
VCC_NEG_5V0_EN
VFB=1.22V
R306
56K_1%
1/16W

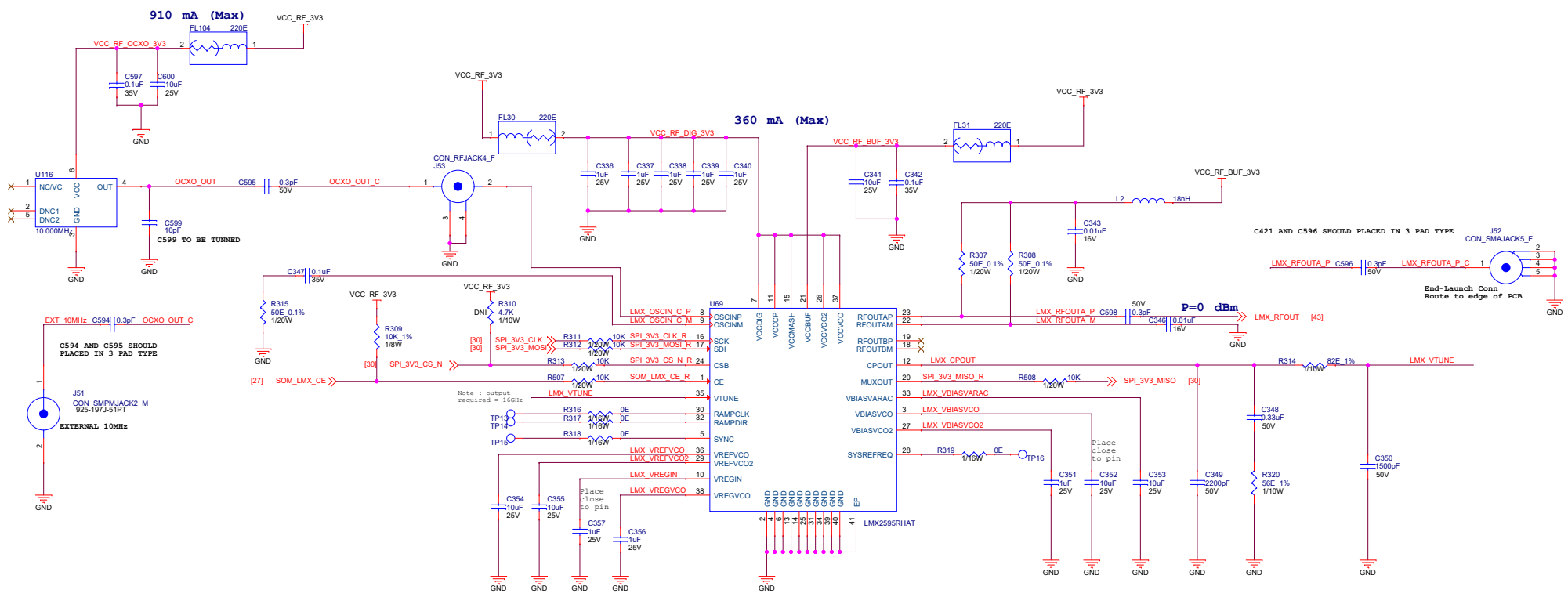
910 mA (Max)
360 mA (Max)
P=0 dBm
C594 AND C595 SHOULD PLACED IN 3 PAD TYPE
C599 TO BE TUNNED
C421 AND C596 SHOULD PLACED IN 3 PAD TYPE
EXTERNAL 10MHz
End-Launch Conn
Route to edge of PCB
Note : output required = 16GHz
Place close to pin
LMX2595RHAT
U69
U116
J51
J52
J53
FL104
FL30
FL31
VCC_RF_3V3
VCC_RF_OCXO_3V3
VCC_RF_DIG_3V3
VCC_RF_BUF_3V3
OCXO_OUT
OCXO_OUT_C
EXT_10MHz
LMX_RFOUTA_P
LMX_RFOUTA_M
LMX_RFOUT
LMX_VTUNE
LMX_CPOUT
LMX_VREFVCO
LMX_VREFVCO2
LMX_VREGIN
LMX_VREGVCO
LMX_VBIASVARAC
LMX_VBIASVCO
LMX_VBIASVCO2
SPI_3V3_CLK
SPI_3V3_MOSI
SPI_3V3_CS_N
SPI_3V3_MISO
SOM_LMX_CE
GND