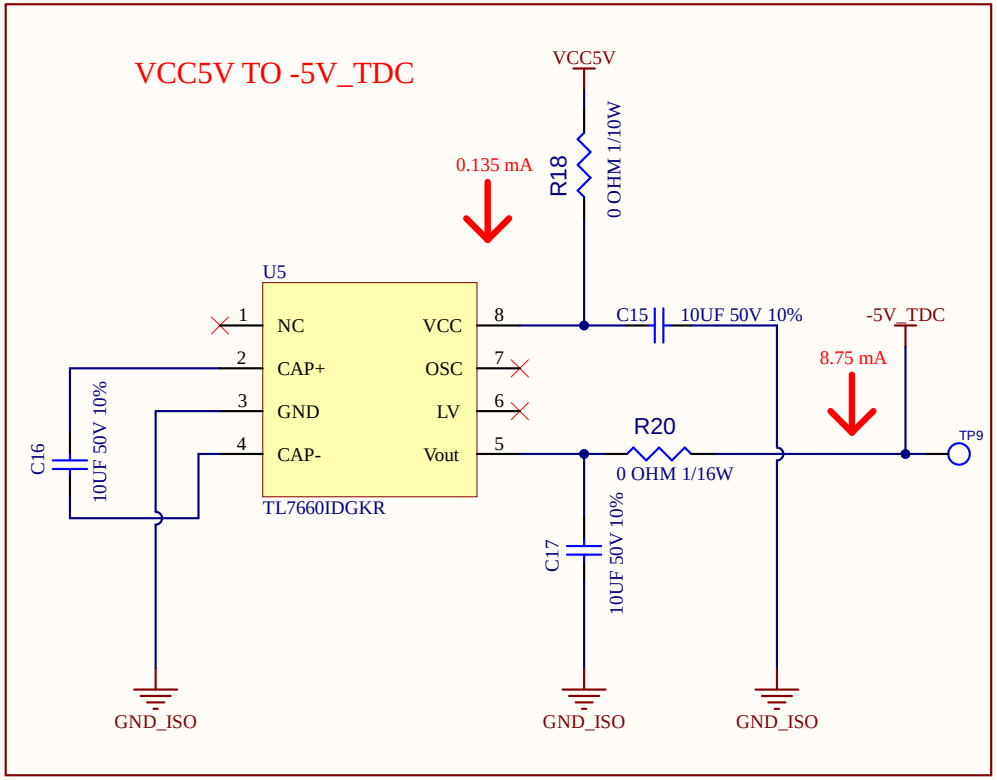

Title		
Size A	Number	Revision
Date: 1-09-2025		Sheet of
File: \\..\TL7660.SchDoc		Drawn By: