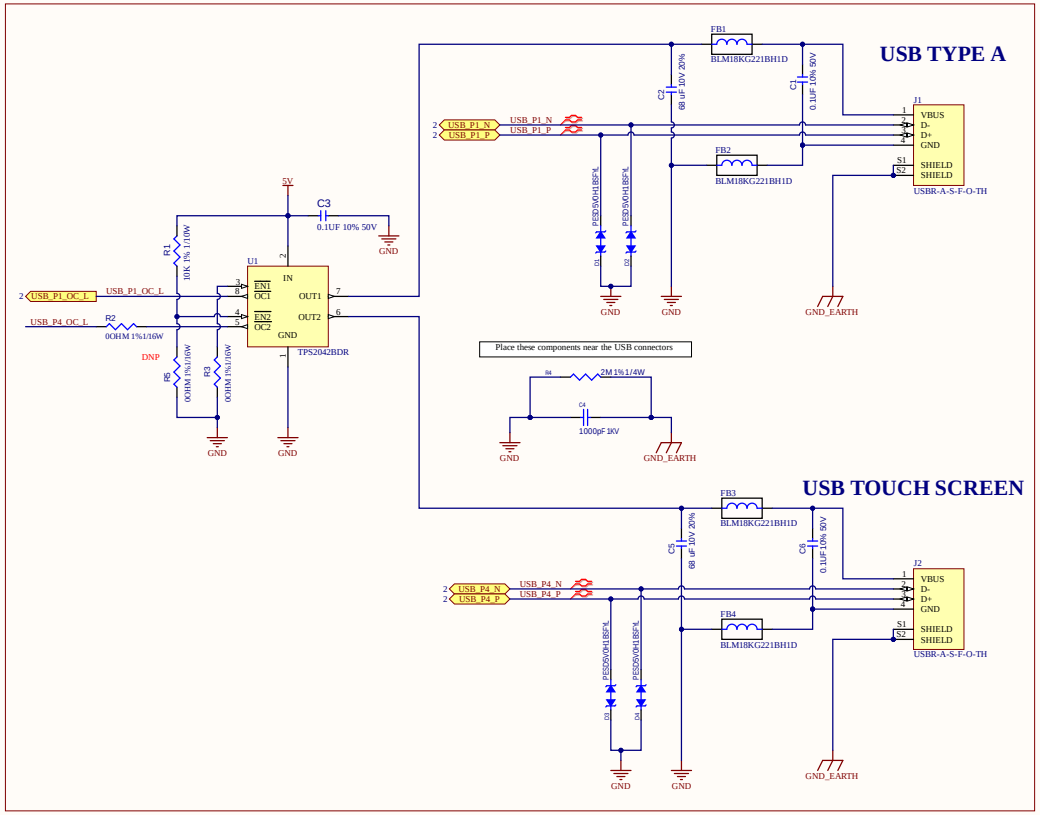

Title		
Size: Orcad C	Number	Revision
Date: 5-27-2025	Sheet of	
File: \..\TPS2042B.SchDoc	Drawn By:	