brick 50W_POE

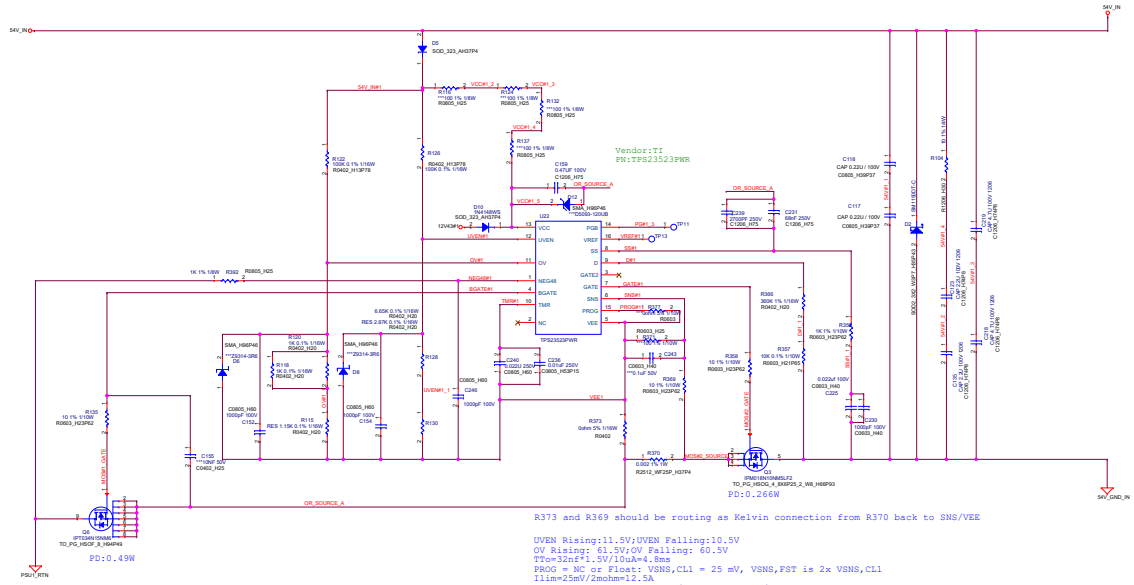

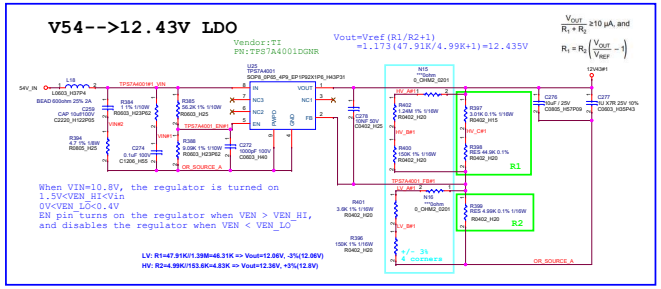

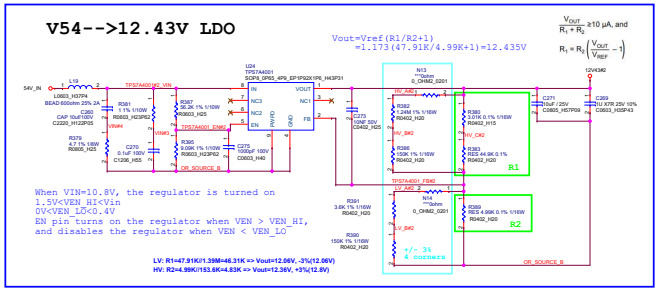

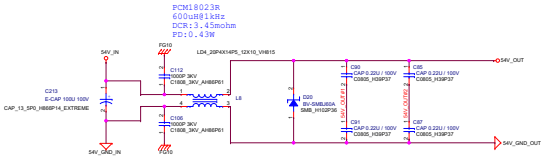

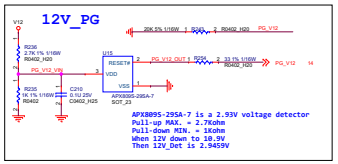

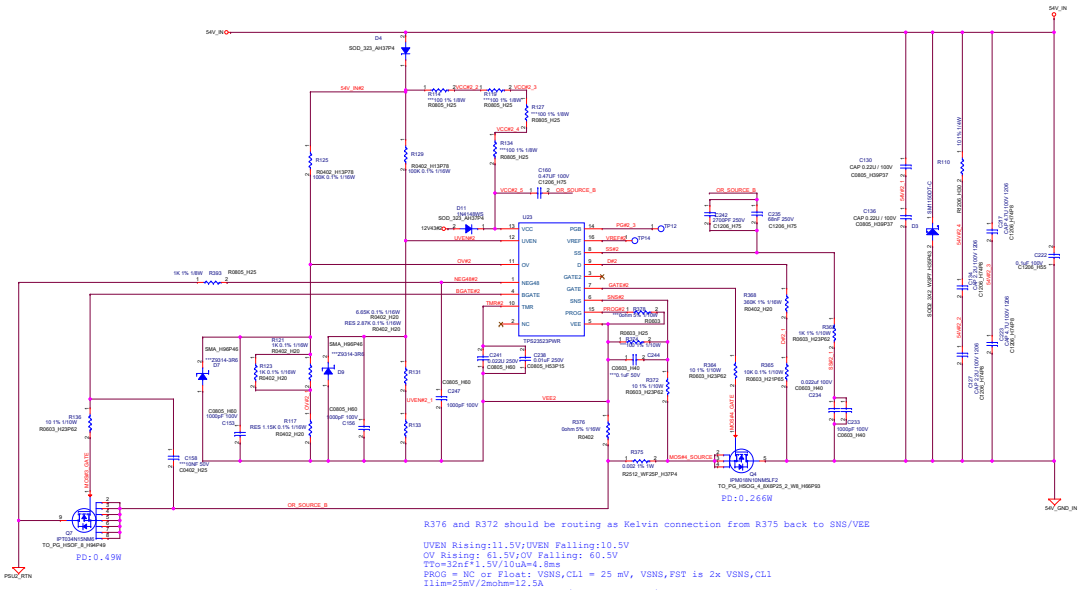

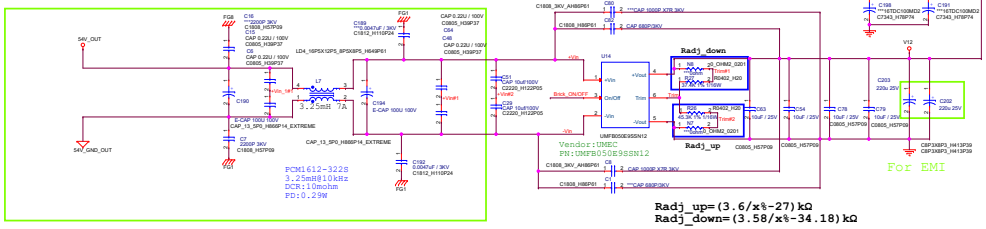

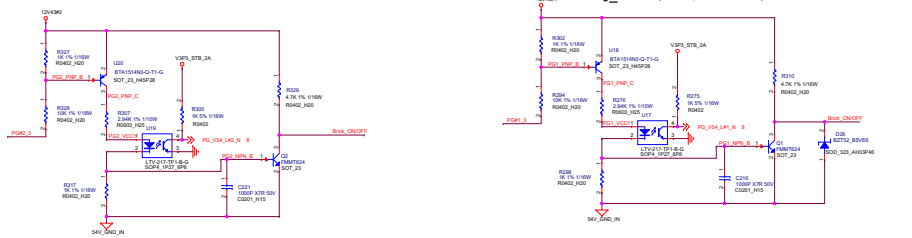

ALPHA	Approved: 2014-11-14 / Checked: 2014-11-14 / Prepared: Zhang Ge	NOTE:	
Document Number: 8EVT5TBWSAN.SG	Release Date: 2025.08.22	Size: Custom / Title: P10-brick 50W_POE	Rev: SAIG
		Date: Friday, November 14, 2025	Sheet 12 of 17