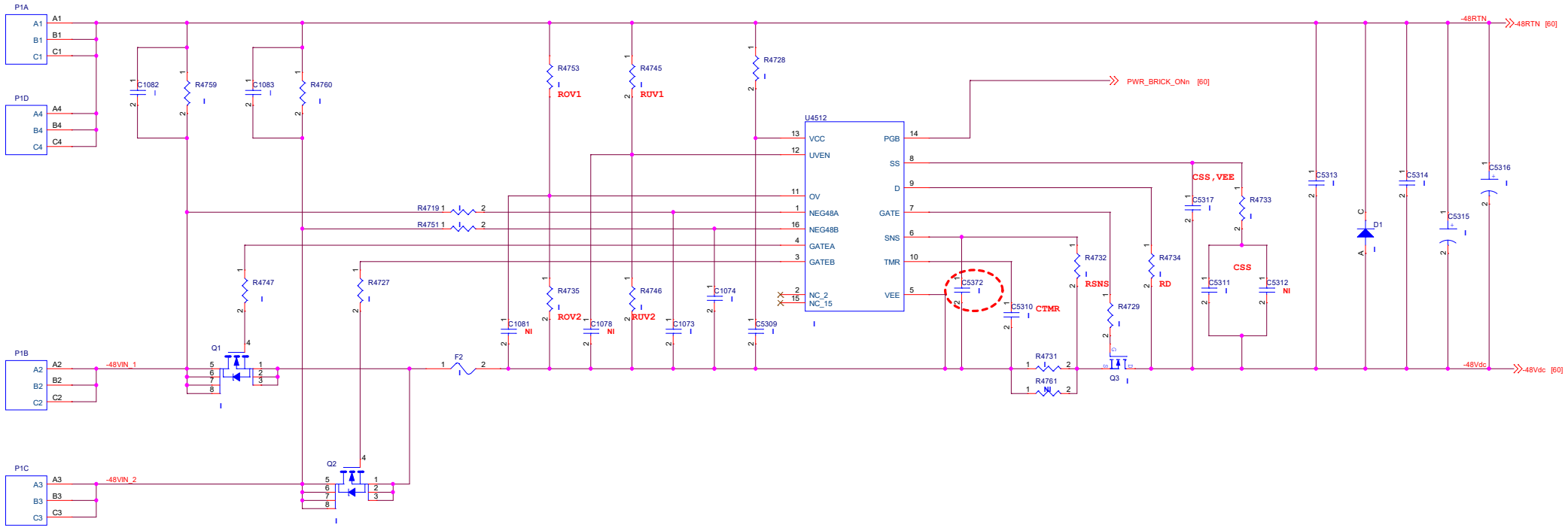

Rov1 = Vov,hyst,tgt / Iov,hyst = 3V / 10 uA = 300 k ohm

Rov2 = Rov1 / Vov,tgt,rising - 1V = 300 k ohm / 75.8V - 1V = 4.02 k ohm