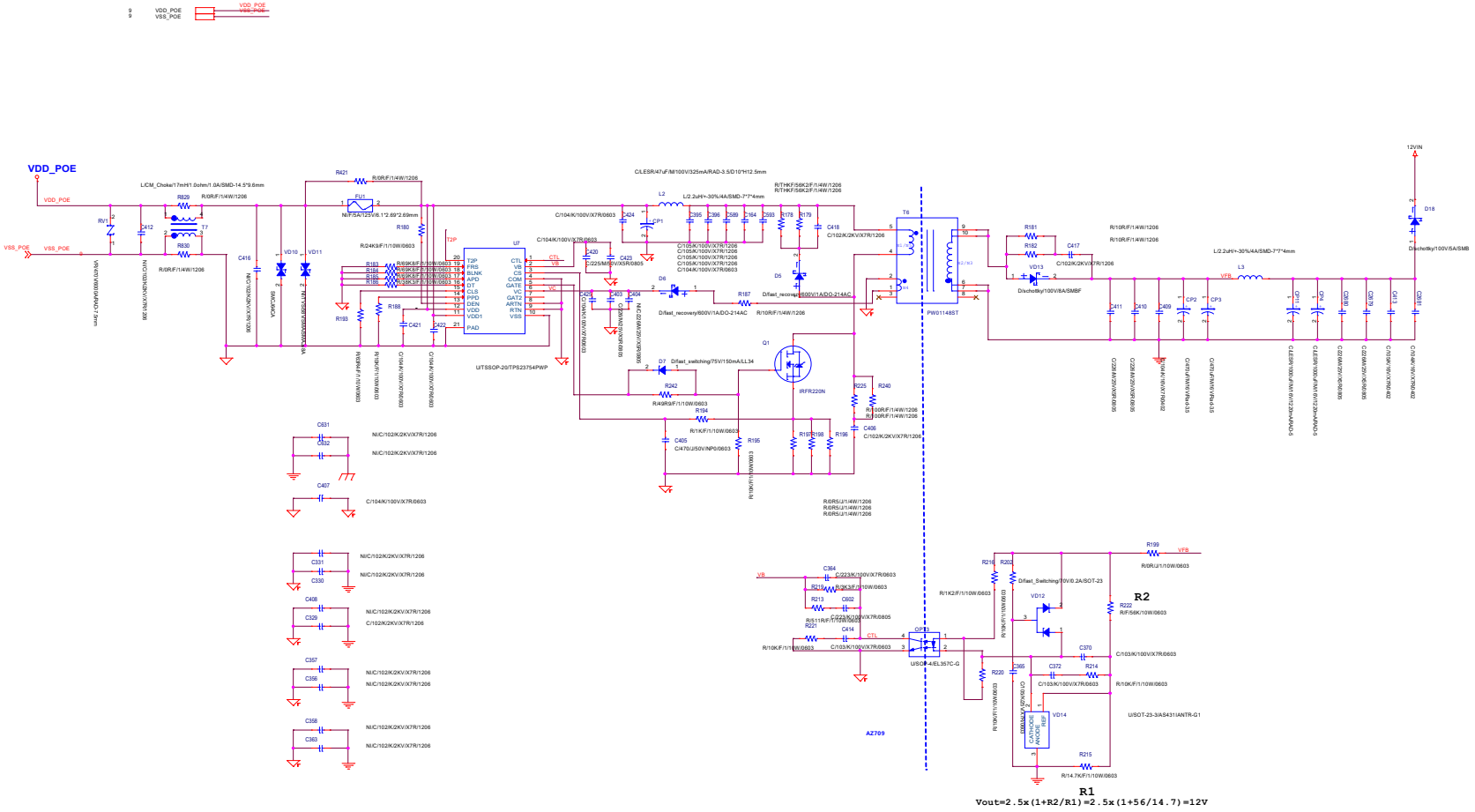

Project Name		Rev 0.1
Title POE		
Tool: Candence	Author: Smaller Chou	Leader:
Date: Tuesday, August 06, 2019	Sheet 22 of 22	