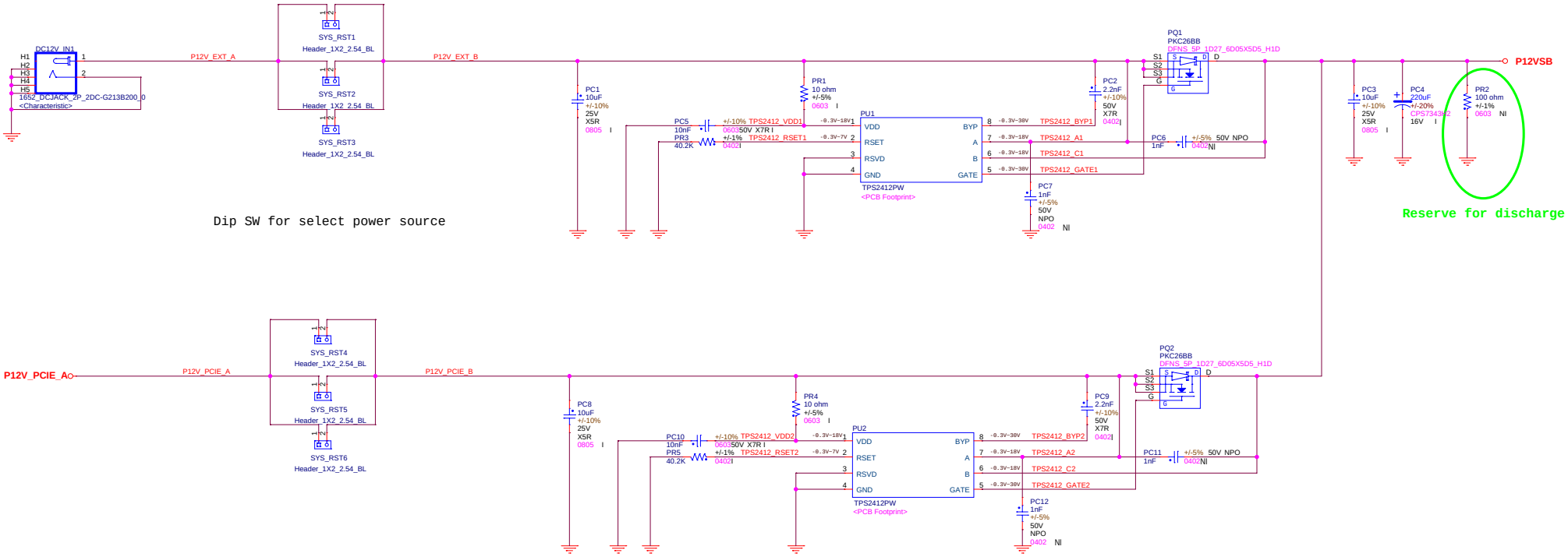

FOXCONN ISSBG

Title: TPS2412PW_Input Oring

Size: C | Document Number: 20EP01A | Rev: V100

Date: Wednesday, September 23, 2020 | Sheet 3 of 5