DOC. NAME	E5908KE_V0.0.1 Circuit Diagram	DOC. NUMBER	PHY#1/2_1.2V Power Supply	SHEET 35 OF 41

DRWN
DATE 2019.08.23
CHKD
APRD
REF
MAN
ISSUE
CONTENT

PHY #1/#2 POWER

PHY #1/#2_3.3V Power Supply

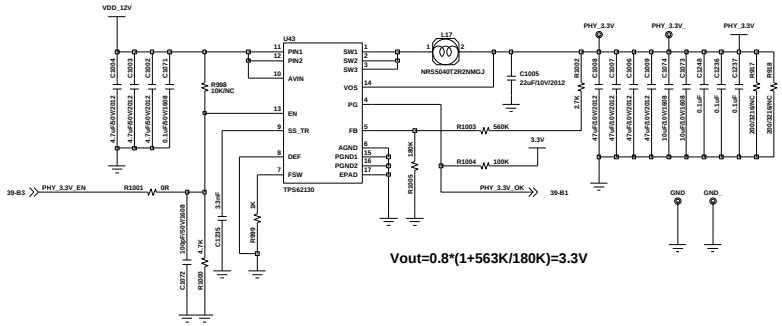

Vout=0.8*(1+563K/180K)=3.3V

PHY #1/#2_0.85V Power Supply

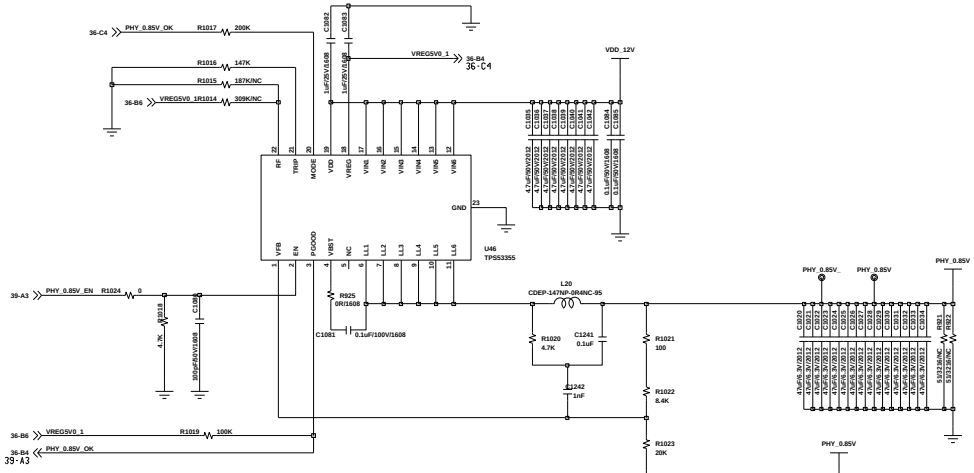

Vout=0.6Vx(1+R1/R2)

PHY #1/#2_2.0V Power Supply

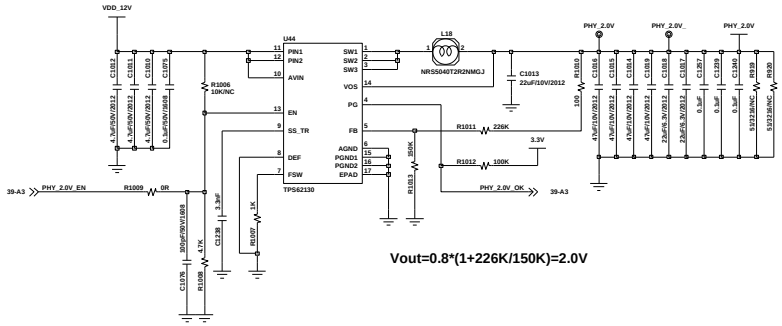

Vout=0.8*(1+226K/150K)=2.0V

PHY #1/#2_1.2V Power Supply

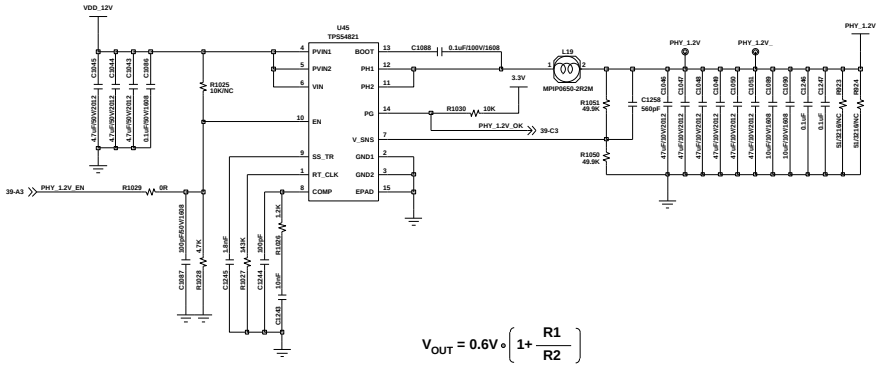

$$V_{OUT} = 0.6V \circ \left(1 + \frac{R1}{R2}\right)$$

UBIQUOSS

DOC. NAME	E5908KE_V0.0.1 Circuit Diagram	DOC. NUMBER	Hot swap control, PSU/FMU signal	SHEET 40 OF 41

DRWN
DATE 2019.08.23
CHKD
APRD
REF
MAN
ISSUE
CONTENT

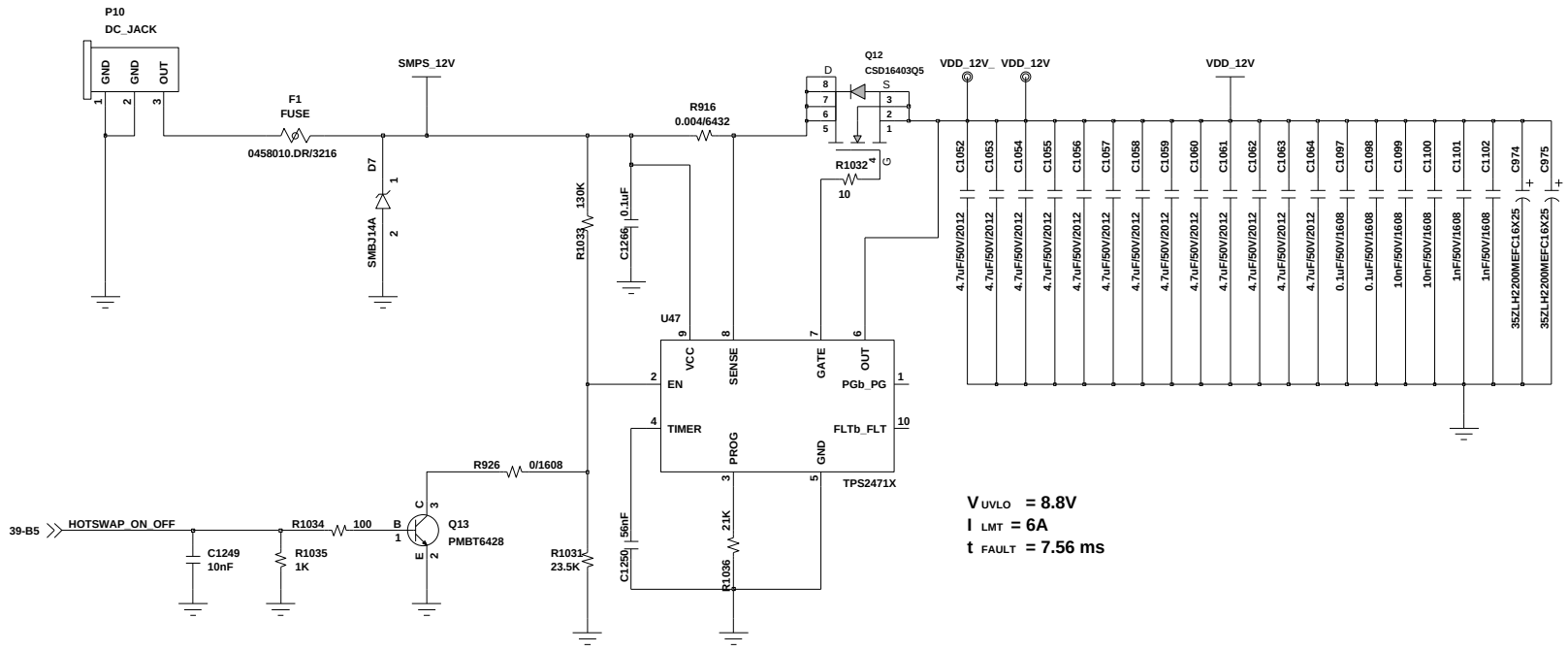

UBIQUOSS