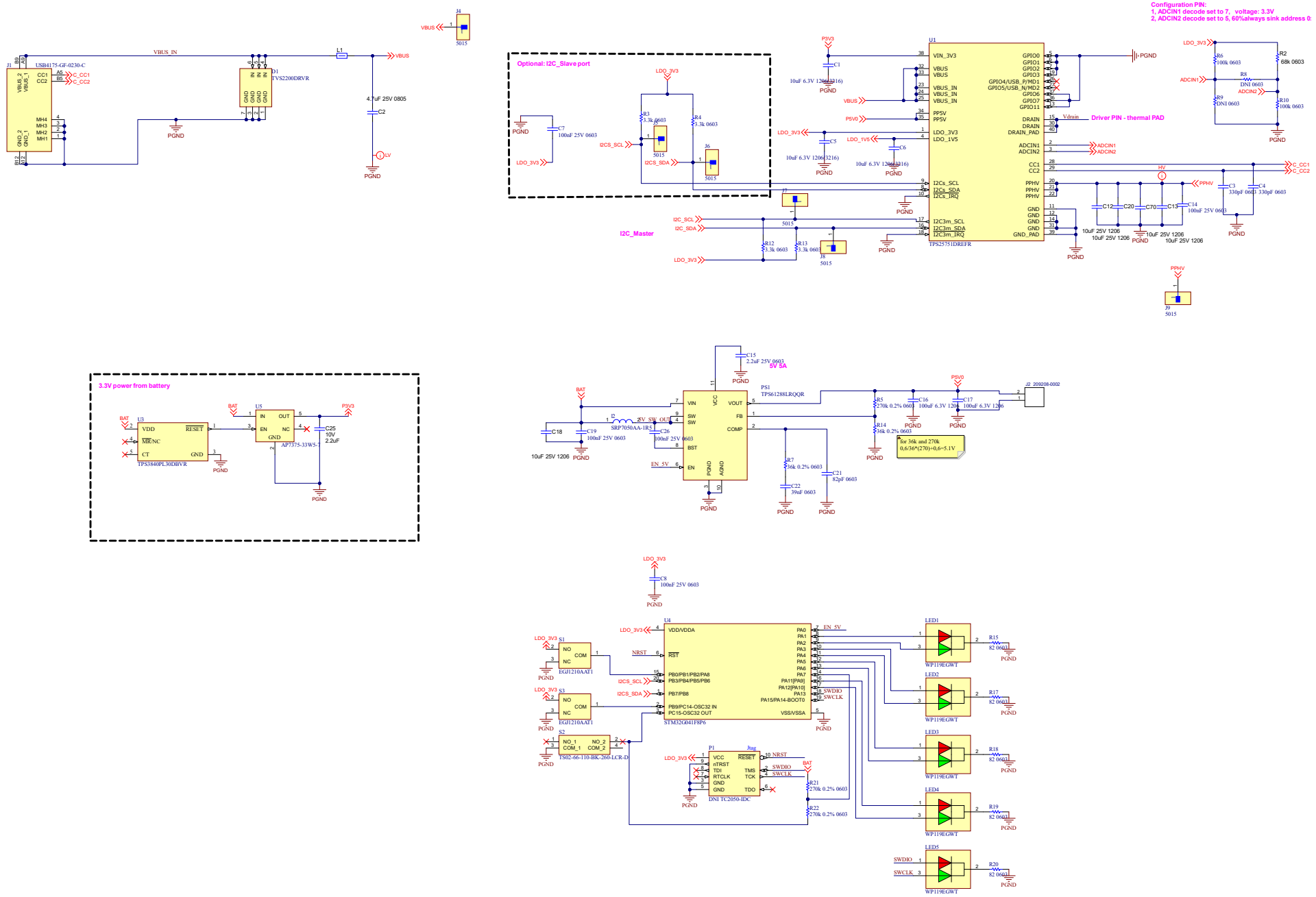

Texas Instruments and/or its licensors do not warrant the accuracy or completeness of this specification or any information contained therein. Texas Instruments and/or its licensors do not warrant that this design will meet the specifications, will be suitable for your application or fit for any particular purpose, or will operate in an implementation. Texas Instruments and/or its licensors do not warrant that the design is production worthy. You should completely validate and test your design implementation to confirm the system functionality for your application.

Orderable:		Designed for: Public Release	Mod. Date: 06/05/2025
TID #: PMP41062		Project Title: 100W USB Type C	
Number: PMP41062	Rev: E1	Sheet Title:	
SVN Rev.: Not in version control		Assembly Variant: [No Variations]	Sheet: 2 of 4
Drawn By:		File: PD Controller.SchDoc	Size: A2
Engineer: Max Wang		Contact: http://www.ti.com/support	http://www.ti.com

© Texas Instruments 2018

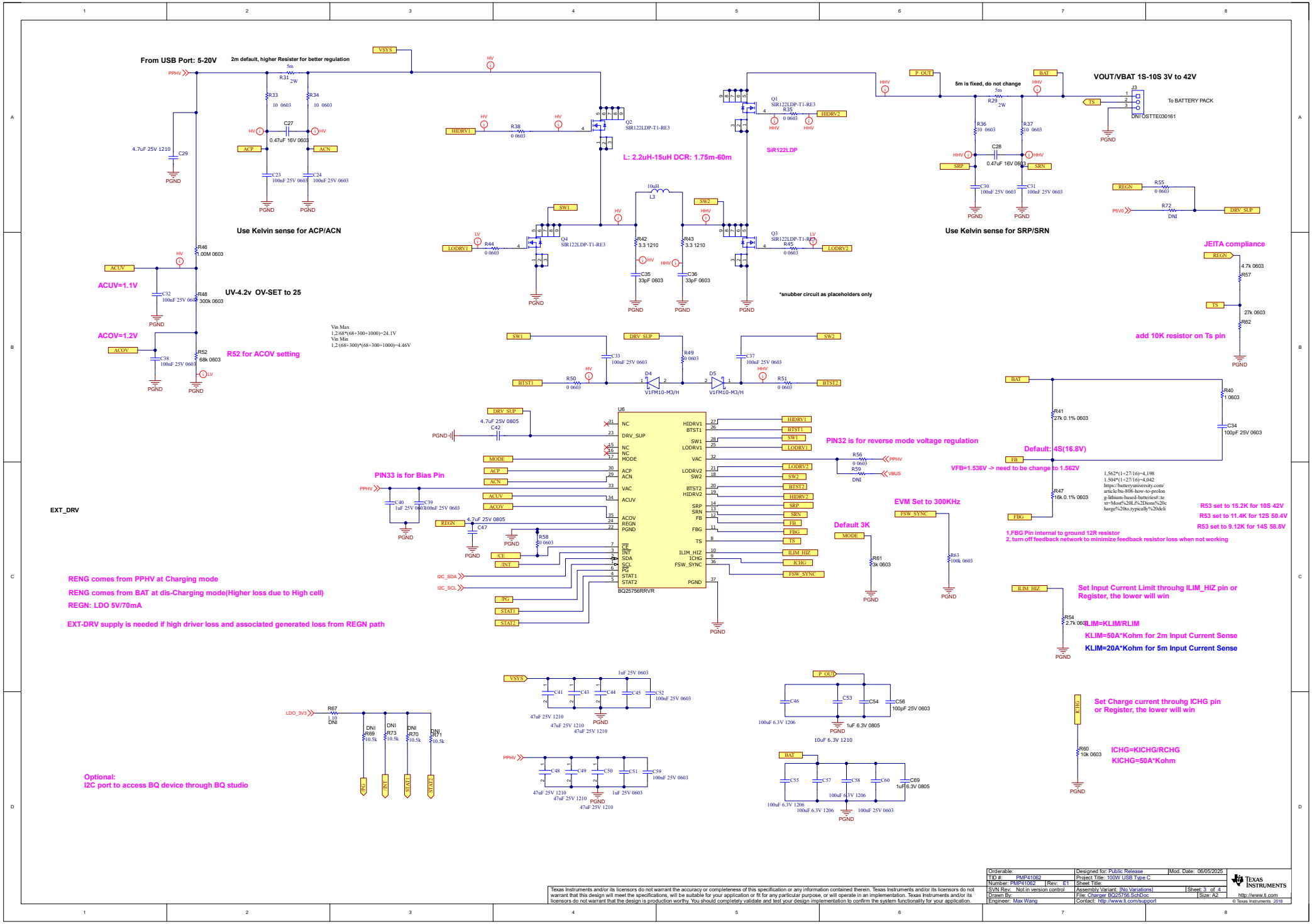

V_{AC}	Input voltage	4.2	70	V
V_{BAT}	Battery voltage	0	70	V