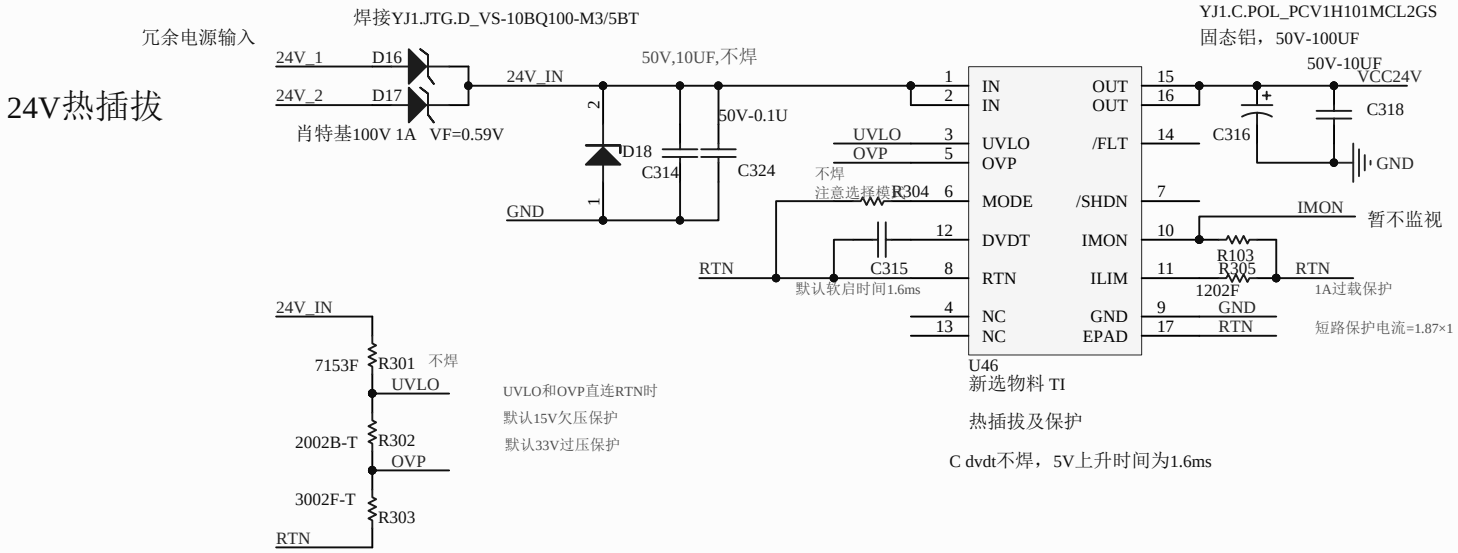

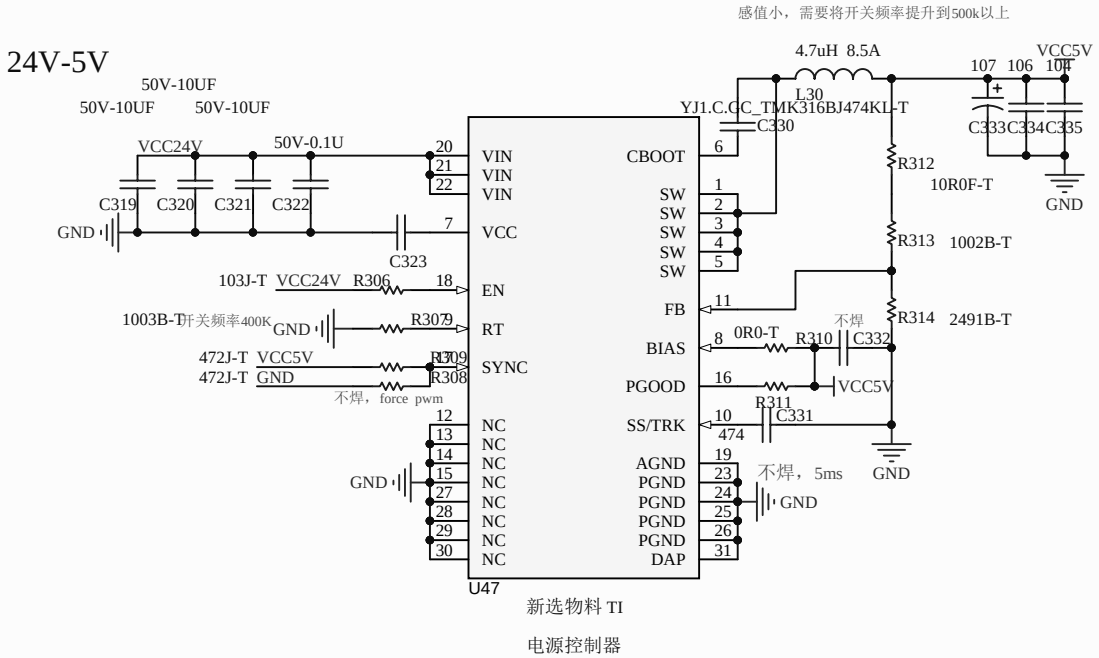

Title		
Size A4	Number	Revision
Date: 2018-09-08		Sheet of
File: D:\xgq-share\..\24V.SchDoc		Drawn By: