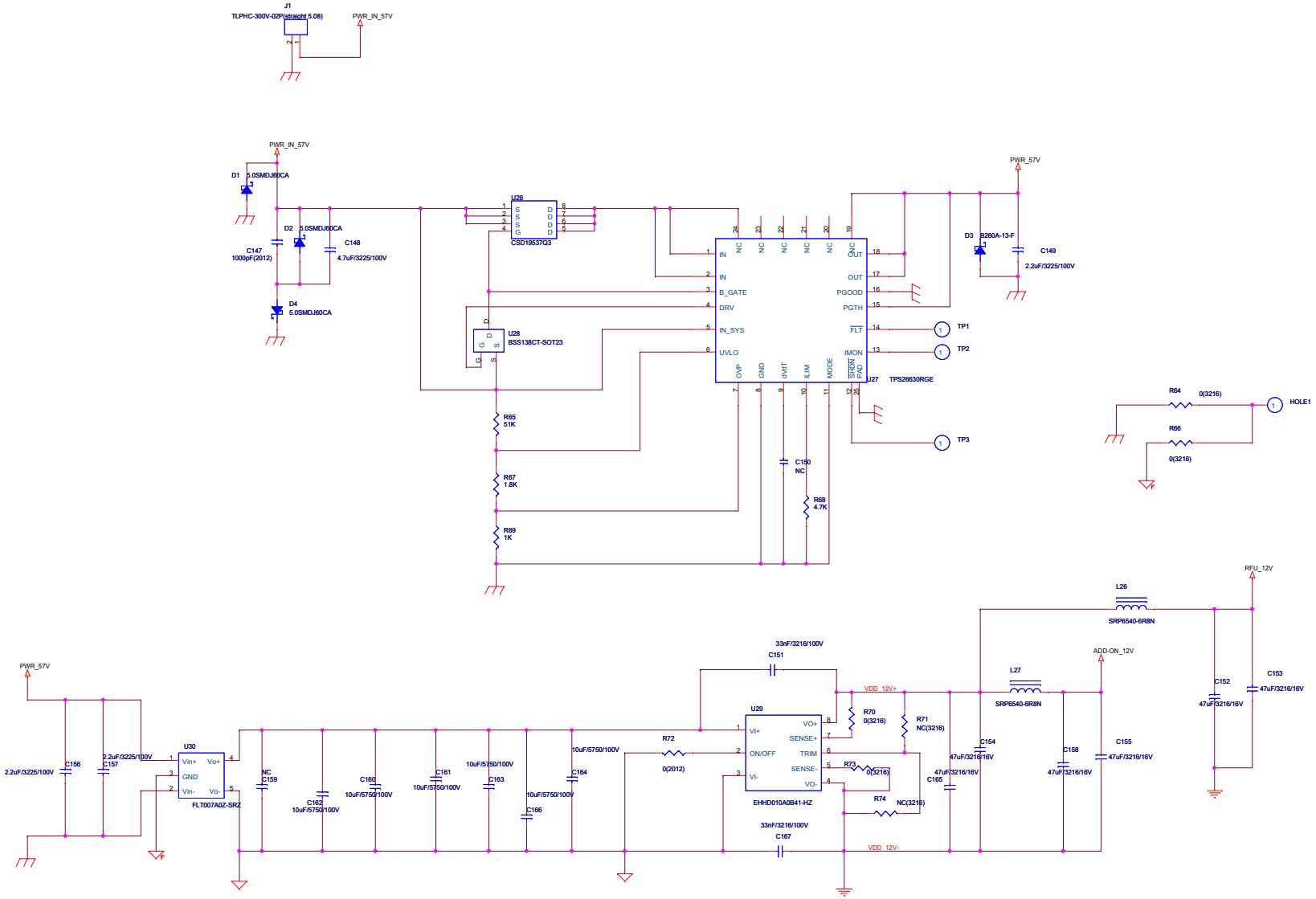

Title	<Title>		
Size A2	Document Number <Doc>		Rev <RevCode>
Date: Sunday, August 30, 2020	Sheet 4 of 16		