FPGA2 CORE POWER

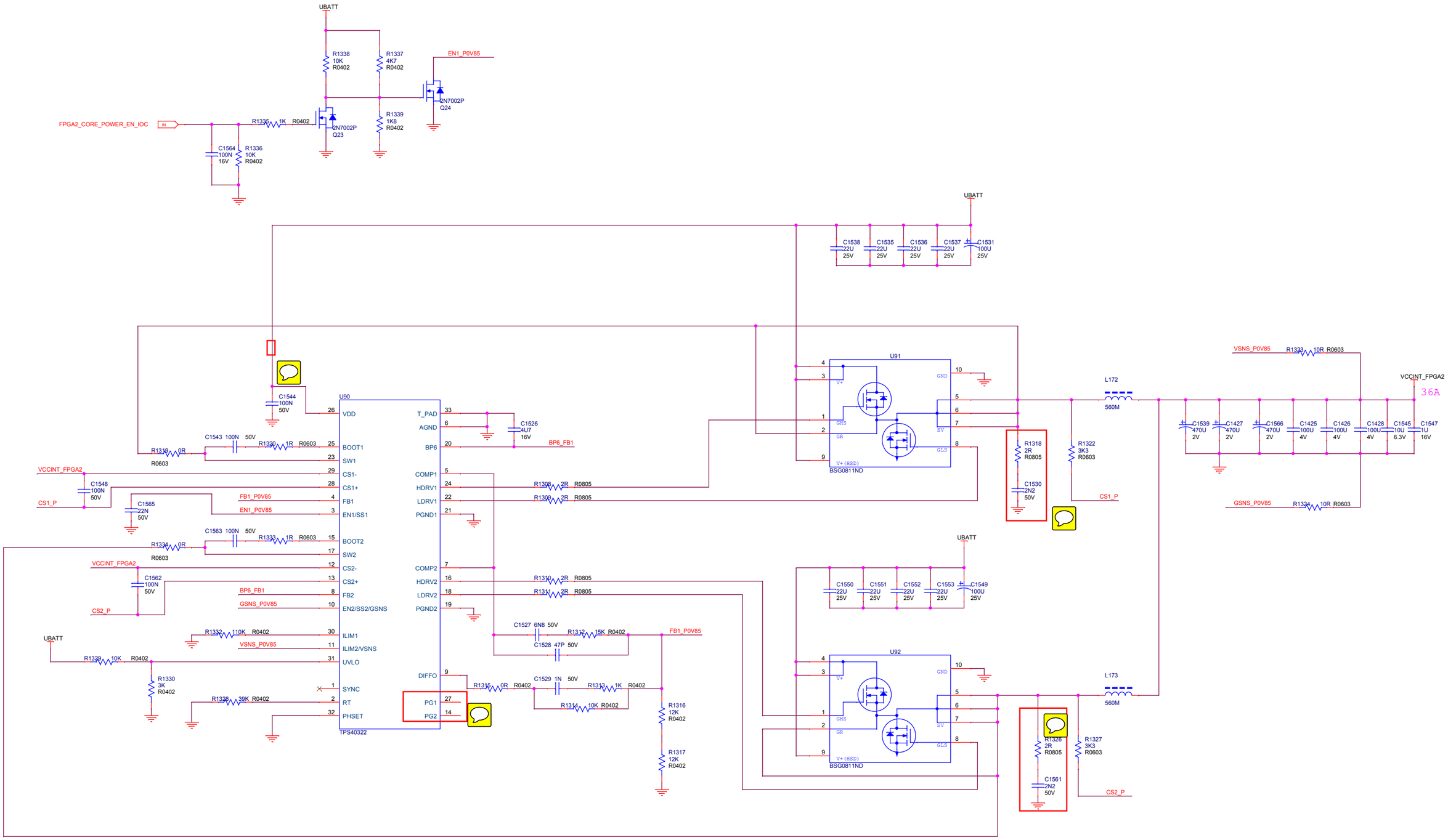

Rev.	Type of change	date of change	auth.	checked

Design: FPGA_PLATFORM

NIO

Title: ZU15EG2-POWER DCDC-CORE POWER

Author: <Author>

Size: A2 | Document Part Number: <Doc> | Sample: ? | Variant: ?

Date: Friday, June 08, 2018 | Sheet 63 of 66