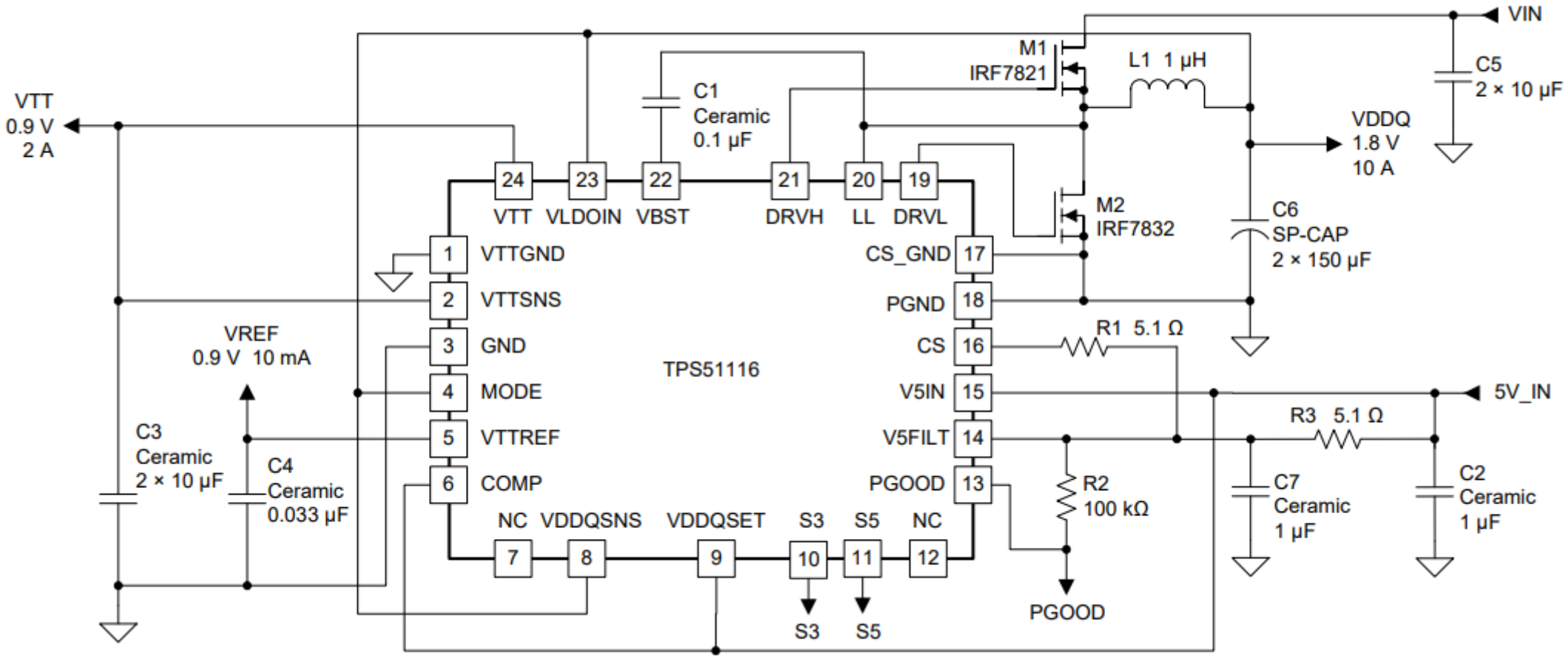4 Typical Application