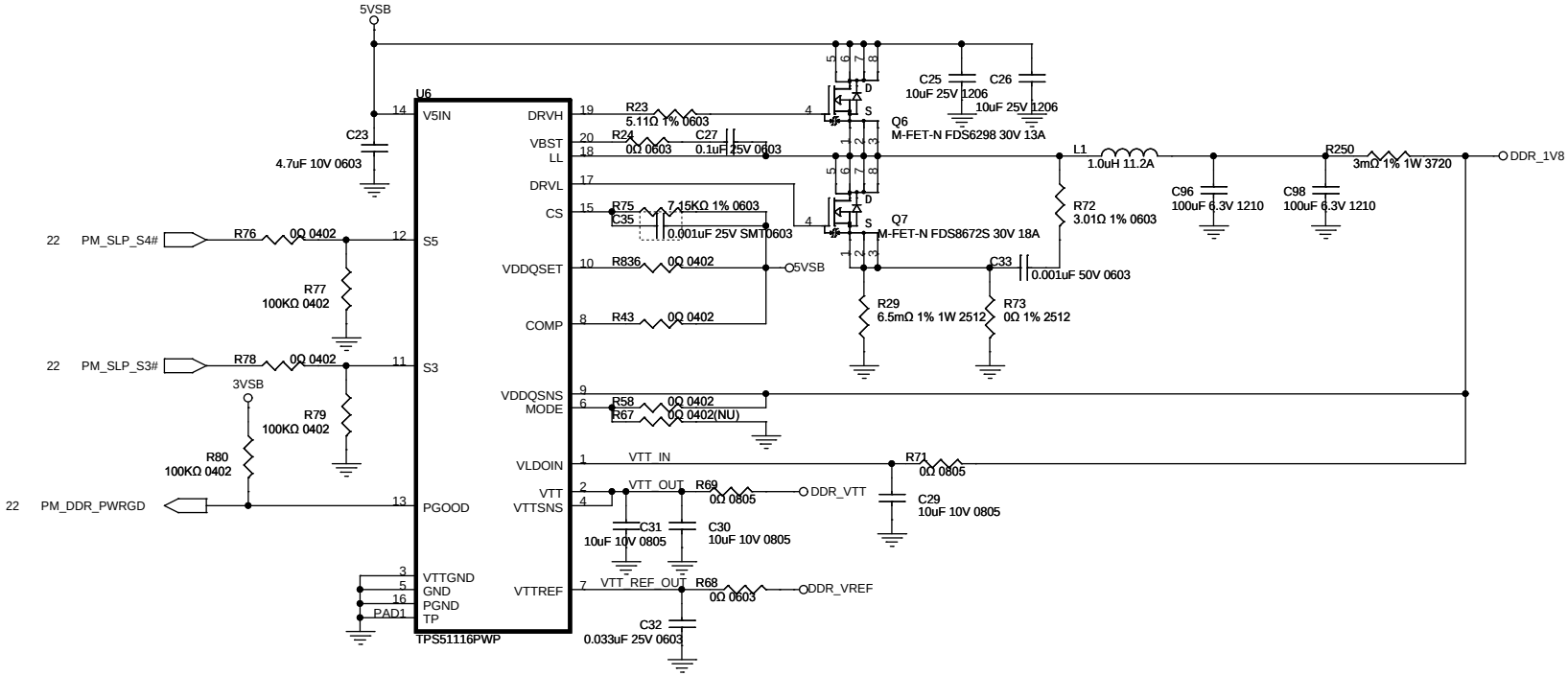(Input : 5volt) to (output : DDR 1.8V/0.9V)