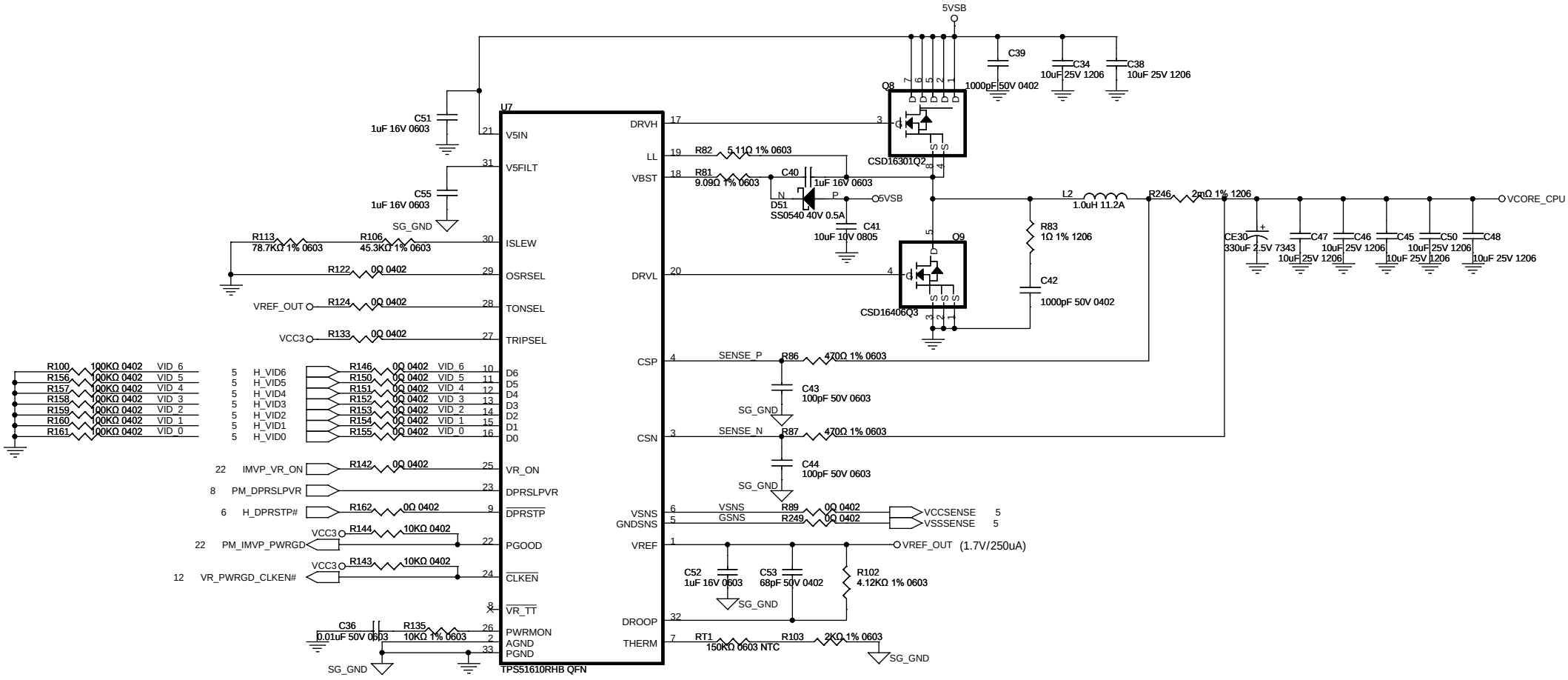(Input : 5volt) to (output : IMVP6+ CPU VCORE)