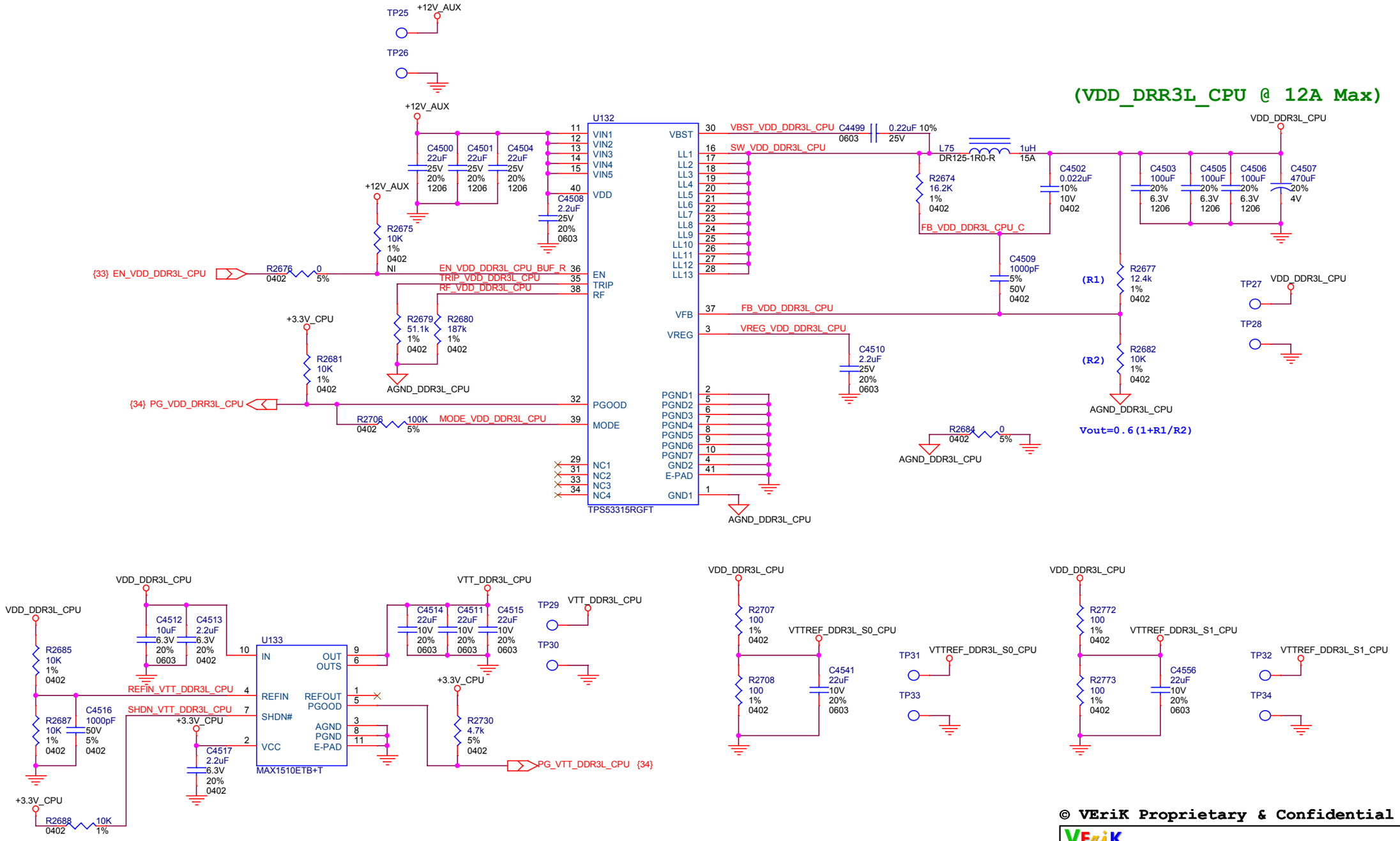

© VEriK Proprietary & Confidential

VEriK Systems

Title	VDD_DDR3L_CPU			
Size B	Document Number V-xxxxx-xxxxx	Engineer: VEriK	Drawn By: VEriK	Rev 0.6
Date: Monday, June 29, 2015		Sheet 21 of 118		