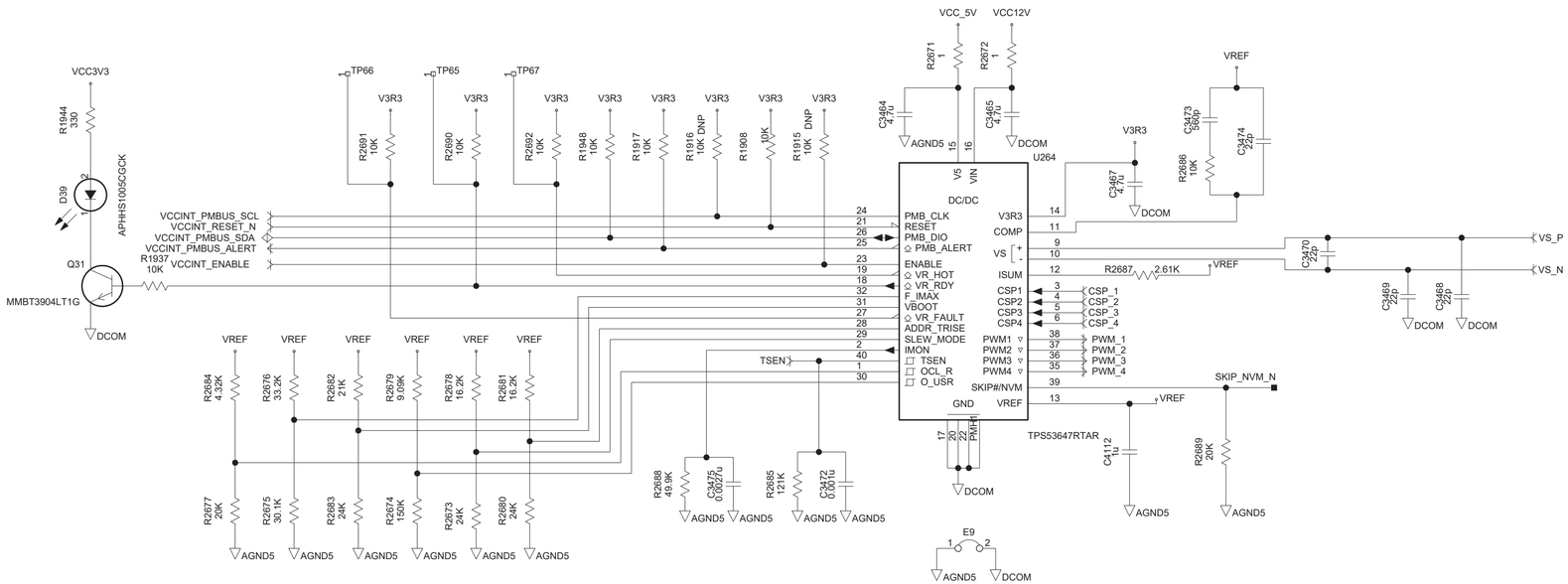
VCC3V3
R1944 330
D39
APHHS1005CGCK
Q31
MMBT3904LT1G
DCOM
R1937 10K
VCCINT_PMBUS_SCL
VCCINT_RESET_N
VCCINT_PMBUS_SDA
VCCINT_PMBUS_ALERT
VCCINT_ENABLE
TP66
TP65
TP67
V3R3
R2691 10K
R2690 10K
R2692 10K
R1948 10K
R1917 10K
R1916 10K DNP
R1908 10K
R1915 10K DNP
VCC_5V
VCC12V
R2671 1
R2672 1
C3464 4.7u
AGND5
C3465 4.7u
DCOM
U264
V5
VIN
DC/DC
PMB_CLK
RESET
PMB_DIO
PMB_ALERT
ENABLE
VR_HOT
VR_RDY
F_IMAX
VBOOT
VR_FAULT
ADDR_TRISE
SLEW_MODE
IMON
TSEN
OCL_R
O_USR
GND
V3R3
COMP
VS
ISUM
CSP1
CSP2
CSP3
CSP4
PWM1
PWM2
PWM3
PWM4
SKIP#/NVM
VREF
TPS53647RTAR
C3467 4.7u
VREF
C3473 680p
C3474 22p
R2686 10K
R2687 2.61K
C3470 22p
VS_P
VS_N
C3469 220
C3468 22p
CSP_1
CSP_2
CSP_3
CSP_4
PWM_1
PWM_2
PWM_3
PWM_4
SKIP_NVM_N
C4112 1u
R2689 20K
R2684 4.32K
R2676 33.2K
R2682 21K
R2679 9.09K
R2678 16.2K
R2681 16.2K
R2677 20K
R2675 30.1K
R2683 24K
R2674 150K
R2673 24K
R2680 24K
R2688 49.9K
C3475 0.0027u
R2685 121K
C3472 0.001u
E9

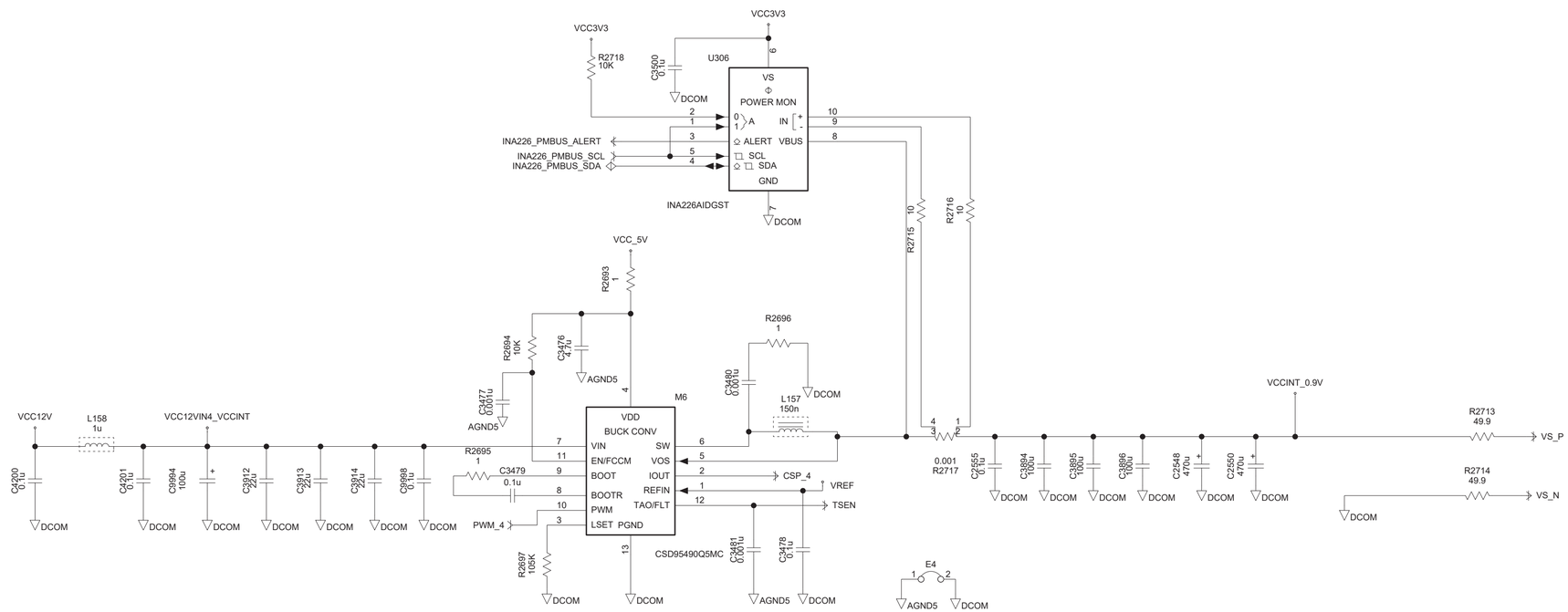
VCC3V3
R2718
10K
C3500
0.1u
DCOM
U306
VS
POWER MON
A
IN
ALERT
VBUS
SCL
SDA
GND
INA226_PMBUS_ALERT
INA226_PMBUS_SCL
INA226_PMBUS_SDA
INA226AIDGST
R2715
10
R2716
10
VCC_5V
R2693
1
R2694
10K
C3476
4.7u
AGND5
C3477
0.001u
R2696
1
C3480
0.001u
L157
150n
M6
VDD
BUCK CONV
VIN
EN/FCCM
BOOT
BOOTR
PWM
LSET
SW
VOS
IOUT
REFIN
TAO/FLT
PGND
CSP_4
VREF
TSEN
PWM_4
R2695
1
C3479
0.1u
R2697
10GK
C3481
0.001u
C3478
0.1u
CSD95490Q5MC
VCC12V
L158
1u
VCC12VIN4_VCCINT
C4200
0.1u
C4201
0.1u
C9994
100u
C3912
22u
C3913
22u
C3914
22u
C9998
0.1u
0.001
R2717
C2555
0.1u
C3884
100u
C3895
100u
C3896
100u
C2548
470u
C2550
470u
VCCINT_0.9V
R2713
49.9
VS_P
R2714
49.9
VS_N
E4

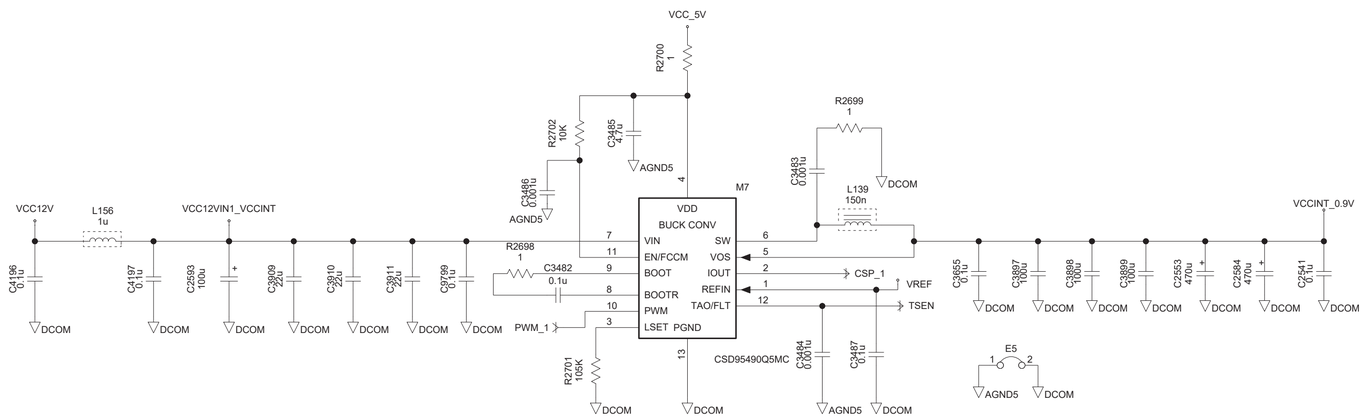
VCC_5V
R2700
1
R2702
10K
C3485
4.7u
AGND5
C3486
0.001u
AGND5
R2699
1
C3483
0.001u
DCOM
L139
150n
M7
VDD
BUCK CONV
VIN
EN/FCCM
BOOT
BOOTR
PWM
LSET
PGND
SW
VOS
IOUT
REFIN
TAO/FLT
CSP_1
VREF
TSEN
VCC12V
L156
1u
VCC12VIN1_VCCINT
VCCINT_0.9V
R2698
1
C3482
0.1u
PWM_1
R2701
105K
CSD95490Q5MC
C3484
0.001u
C3487
0.1u
E5
AGND5
DCOM
C4196
0.1u
C4197
0.1u
C2593
100u
C3909
22u
C3910
22u
C3911
22u
C3799
0.1u
C3655
0.1u
C3897
100u
C3898
100u
C3899
100u
C2553
470u
C2584
470u
C2541
0.1u

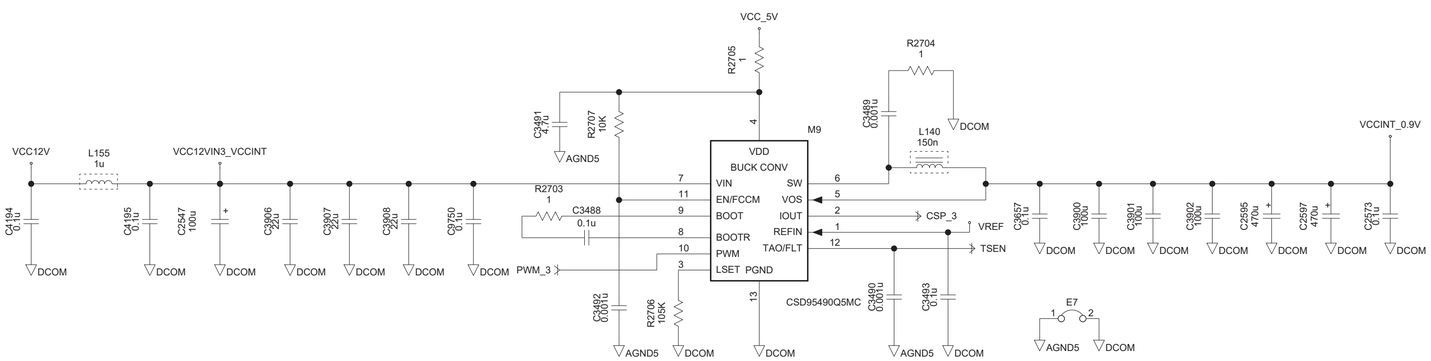
VCC_5V
R2705
1
C3491
4.7u
R2707
10K
AGND5
R2704
1
C3489
0.001u
DCOM
L140
150n
M9
VDD
BUCK CONV
VIN
EN/FCCM
BOOT
BOOTR
PWM
LSET
PGND
SW
VOS
IOUT
REFIN
TAO/FLT
CSP_3
VREF
TSEN
VCC12V
L155
1u
VCC12VIN3_VCCINT
VCCINT_0.9V
R2703
1
C3488
0.1u
PWM_3
C3492
0.001u
R2706
105K
CSD95490Q5MC
C3490
0.001u
C3493
0.1u
E7
AGND5
DCOM
C4194
0.1u
C4195
0.1u
C2547
100u
C3906
22u
C3907
22u
C3908
22u
C3750
0.1u
C3657
0.1u
C3900
100u
C3901
100u
C3902
100u
C2595
470u
C2597
470u
C2573
0.1u

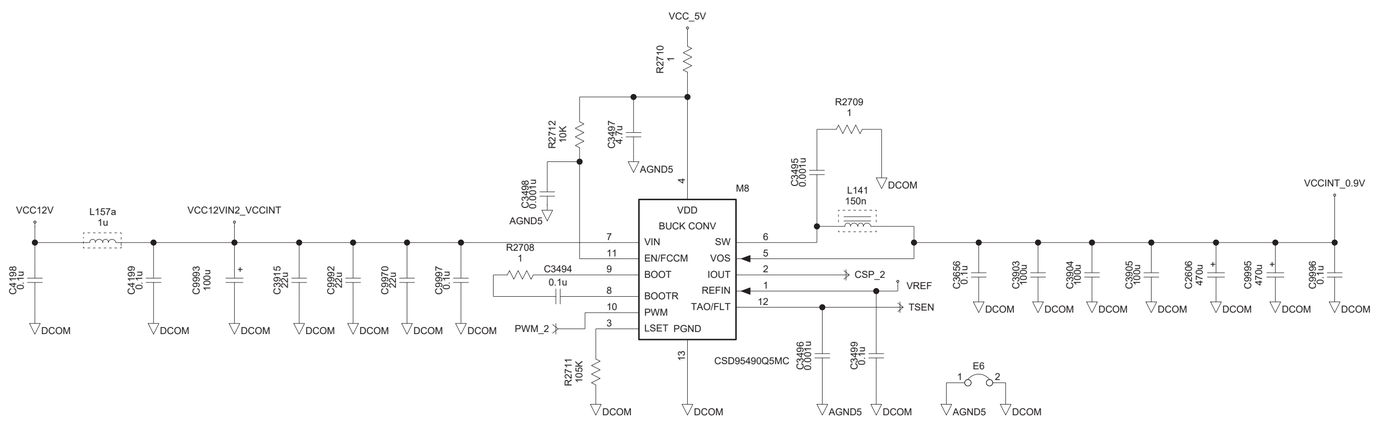
VCC_5V
R2710
1
R2712
10K
C3497
4.7u
AGND5
R2709
1
C3495
0.001u
DCOM
L141
150n
M8
VDD
BUCK CONV
VIN
EN/FCCM
BOOT
BOOTR
PWM
LSET
PGND
SW
VOS
IOUT
REFIN
TAO/FLT
CSP_2
VREF
TSEN
VCC12V
L157a
1u
VCC12VIN2_VCCINT
VCCINT_0.9V
R2708
1
C3494
0.1u
PWM_2
R2711
105K
CSD95490Q5MC
C3496
0.001u
C3499
0.1u
E6
AGND5
DCOM
C4198
0.1u
C4199
0.1u
C9993
100u
C3915
22u
C9992
22u
C9970
22u
C9997
0.1u
C3656
0.1u
C3903
100u
C3904
100u
C3905
100u
C2606
470u
C9995
470u
C9996
0.1u