The system power supply 5V 3A

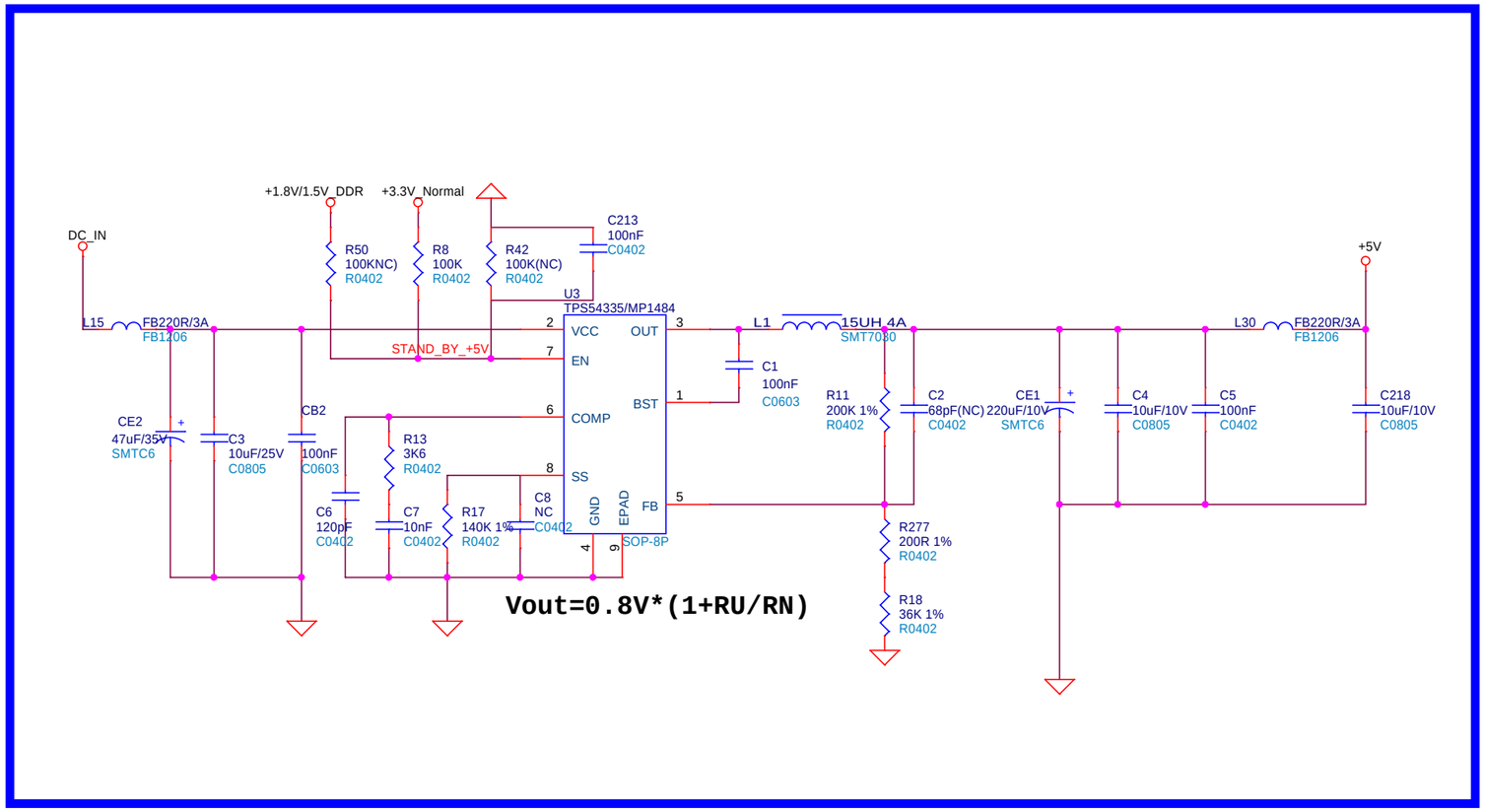

The system power supply 3V3 3A

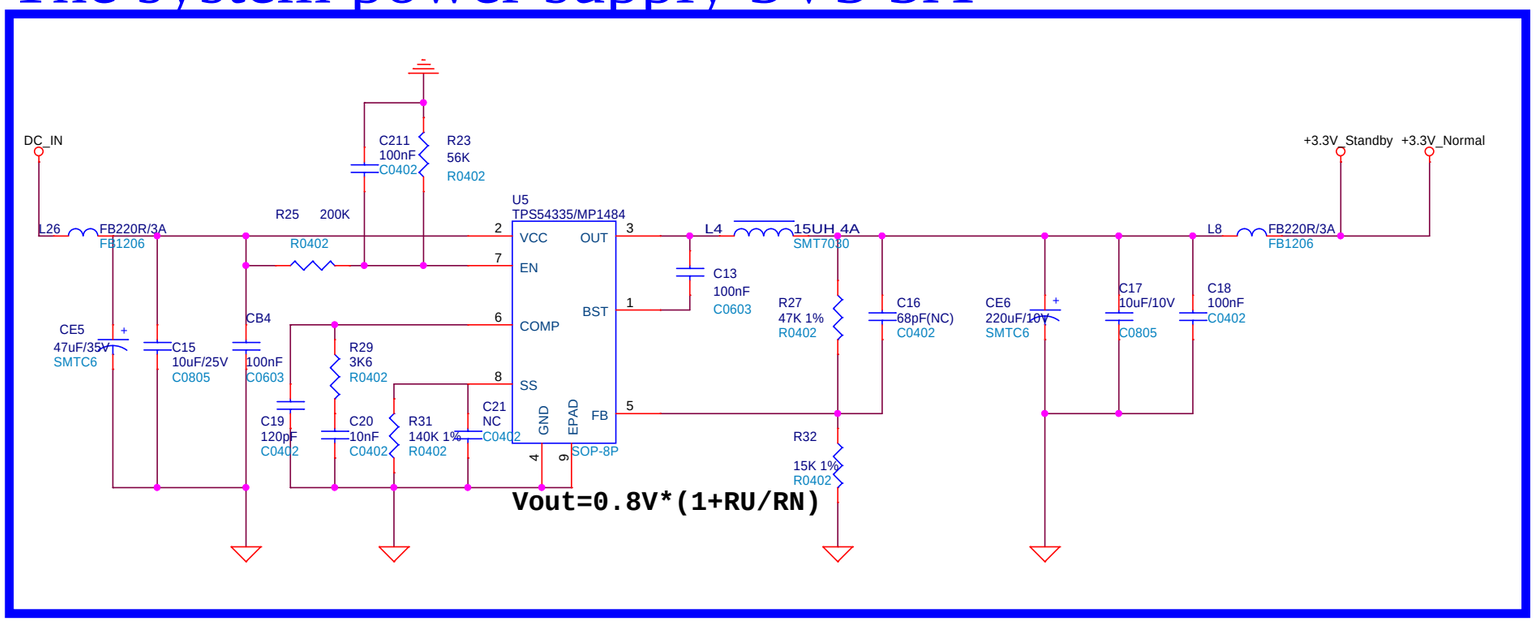

PDF pdfFactory Pro www.fineprint.cn