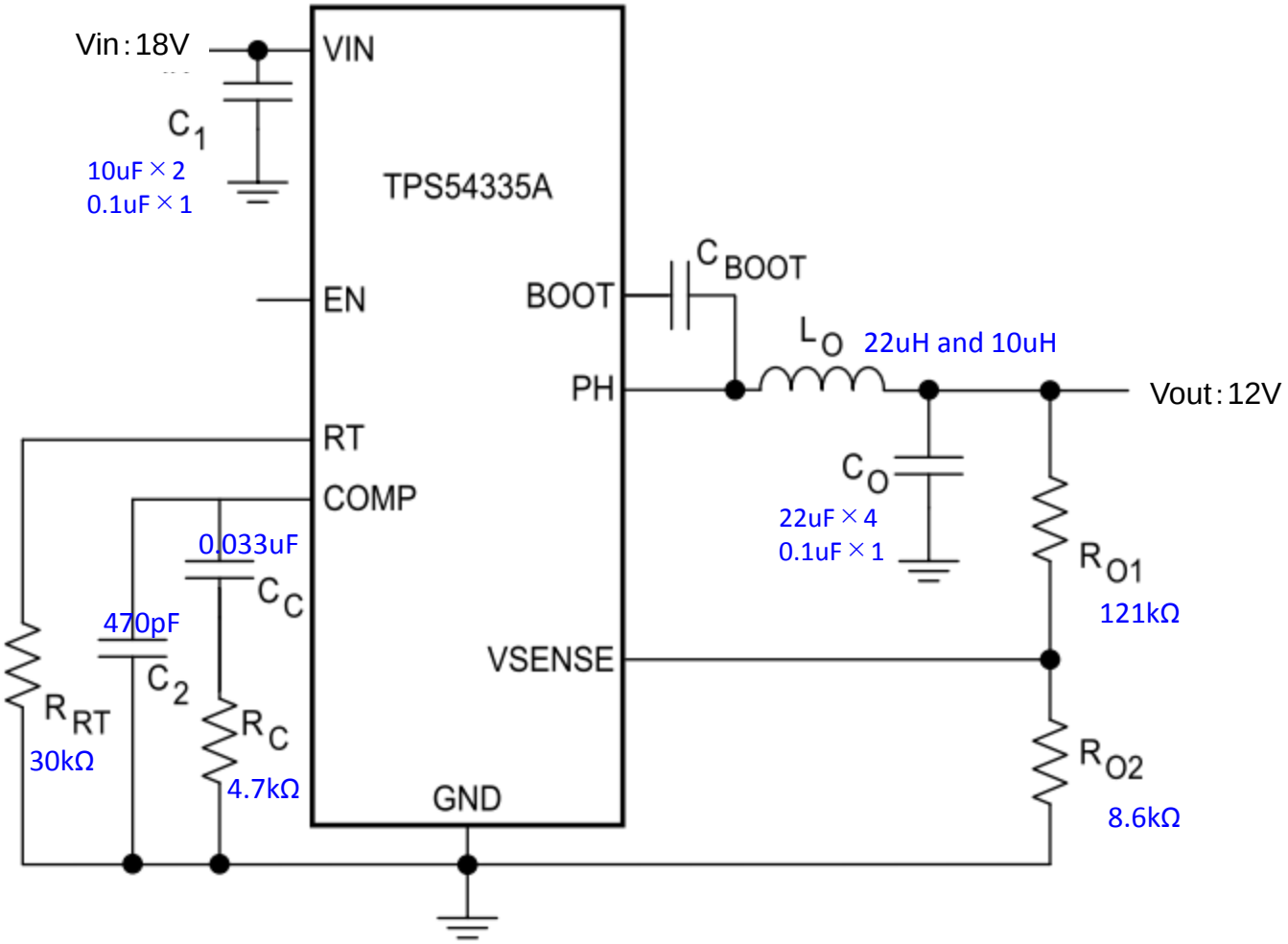TPS54335A test circuit