5V to 0.85V 25A Regulator for FPGA VCC rail

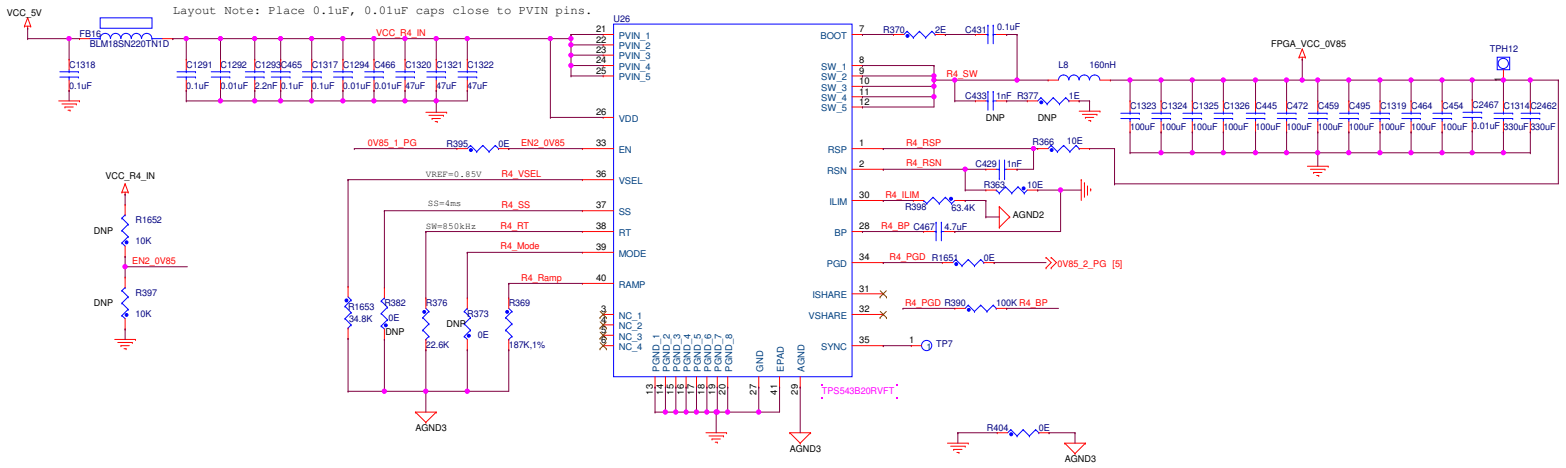

Title <Title>		
Size C	Document Number <Doc>	Rev <RevCode>
Date: Thursday, July 06, 2023	Sheet 1 of 1	