12V to 1.35V 25A Stacked Regulator 1 for GDDR6 rail

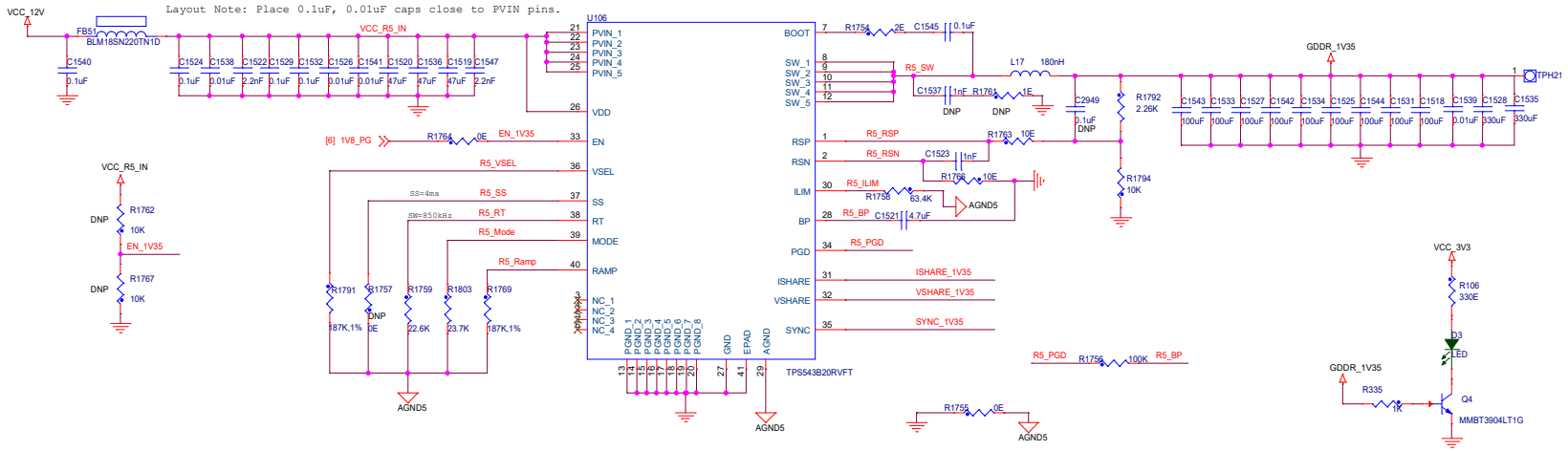
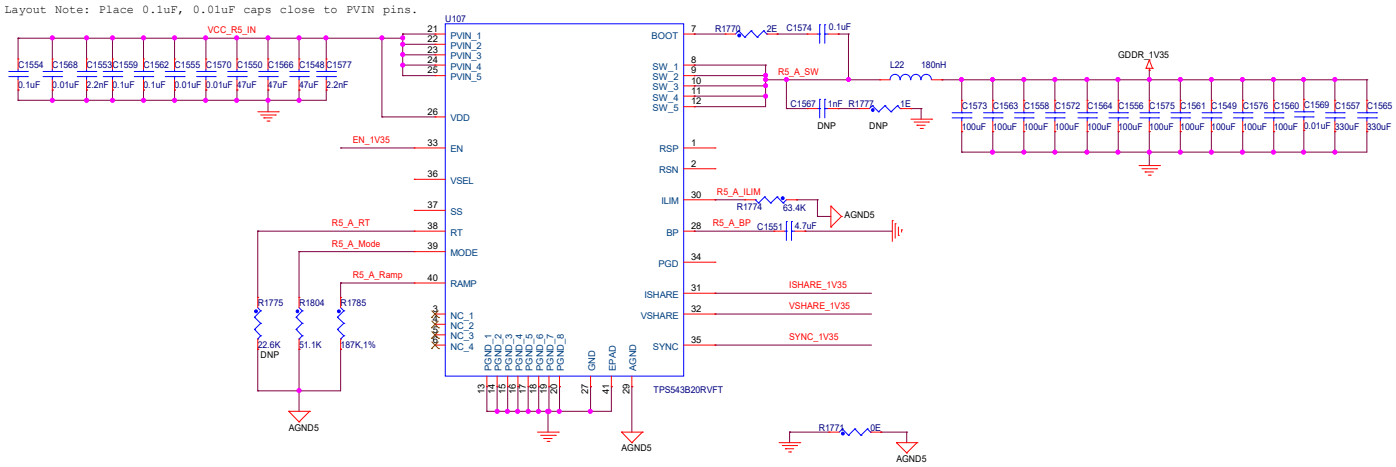
12V to 1.35V 25A Stacked Regulator 2 for GDDR6 rail