Design Parameters:
12V to 0.95V/70A
Advanced Current Mode
Switching frequency=500KHz (40.2KOhm)
Program soft start= 4ms (DNP)
Enable threshold=1.45-1.6V-1.75V +/-0.3V
Reference voltage is programmable by VSEL 0.6-1.1V
BP LDO Regulator=4.5V-5V-5.5V
UVLO locked threshold= 3.2V +/- 0.2V
Ramp selection=187KOhm-> Cramp=14.1pF
Minimum ON time=30ns < 158ns (Design requirement)
Power on delay=512us
Current share accuracy= +/-15% >20A/phase
+/-3A <20A/phase
High side short circuit protection=60A
Low side FET current protection=47.38A+/-10%

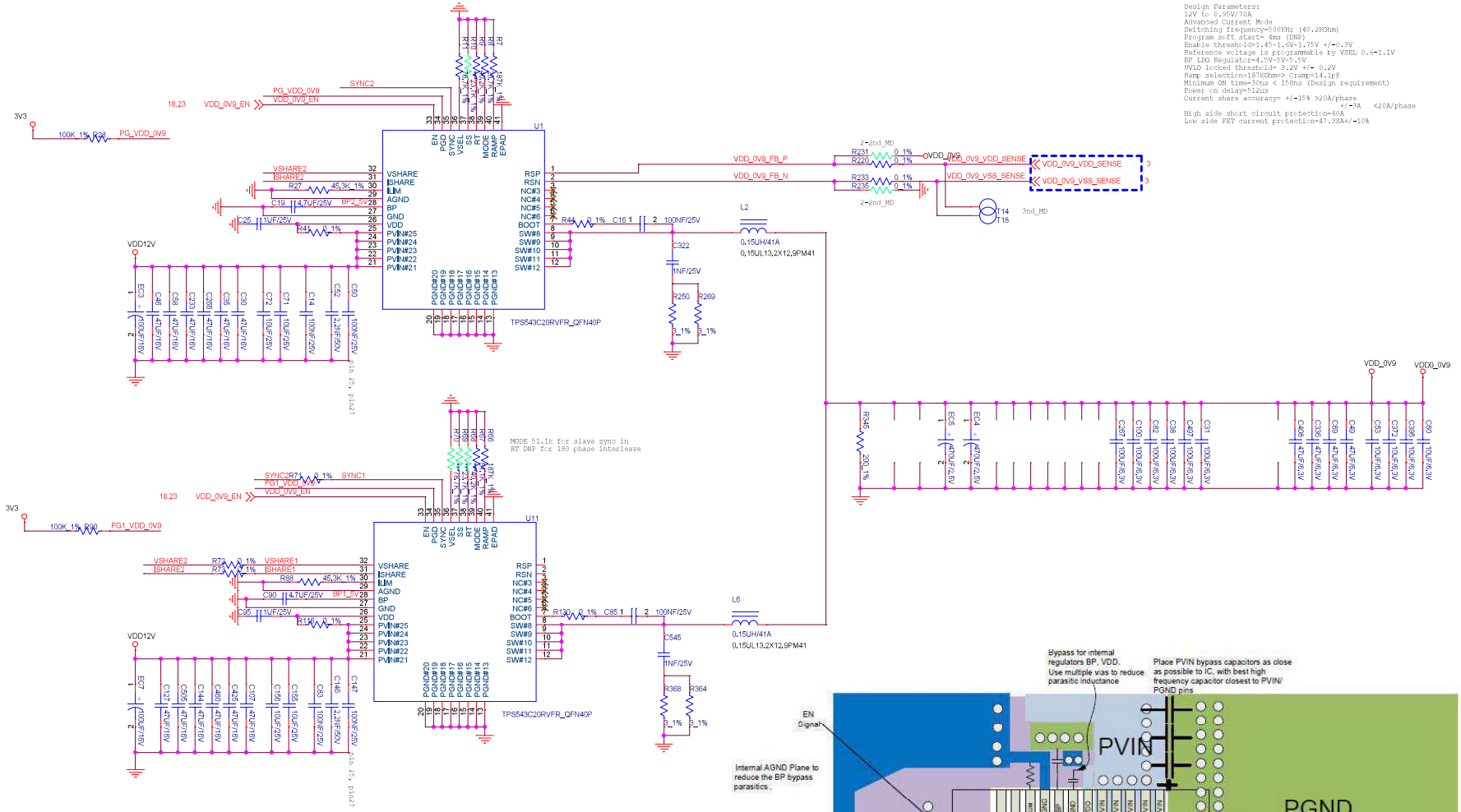

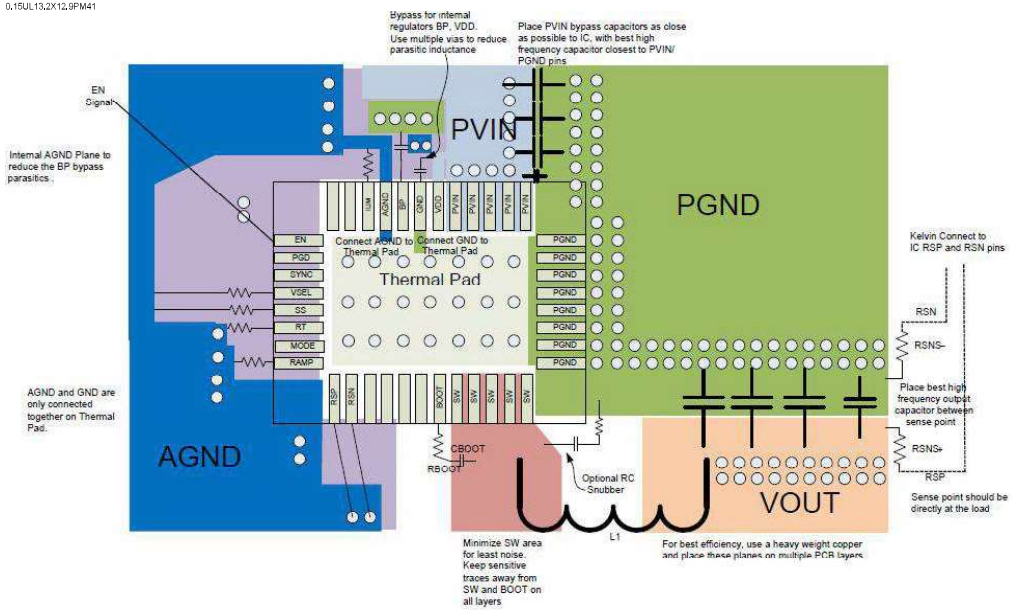

Figure 42. Example Layout

<Core Design>

WNC **Proprietary & Confidential**

Title				
PWR_0V95				
Size C	Model Name QAOP2-OAG-G	Part Number 55QAOP21.DG1	Author <Author>	Rev ver1
Date: Friday, March 05, 2021		Sheet 18 of 37		