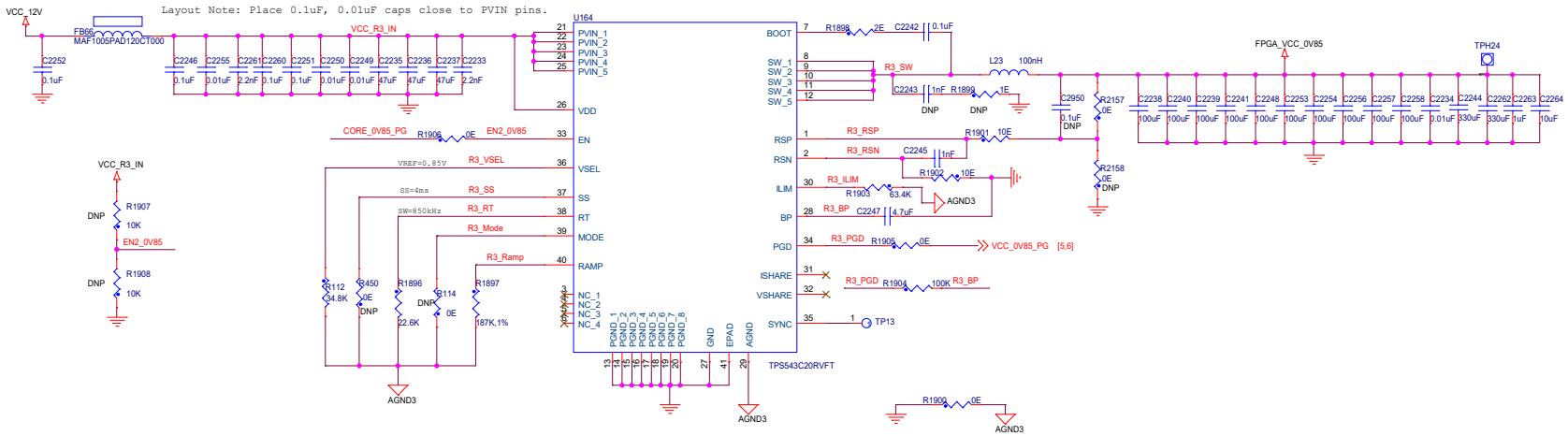12V to 0.85V 40A Regulator for FPGA VCC rail