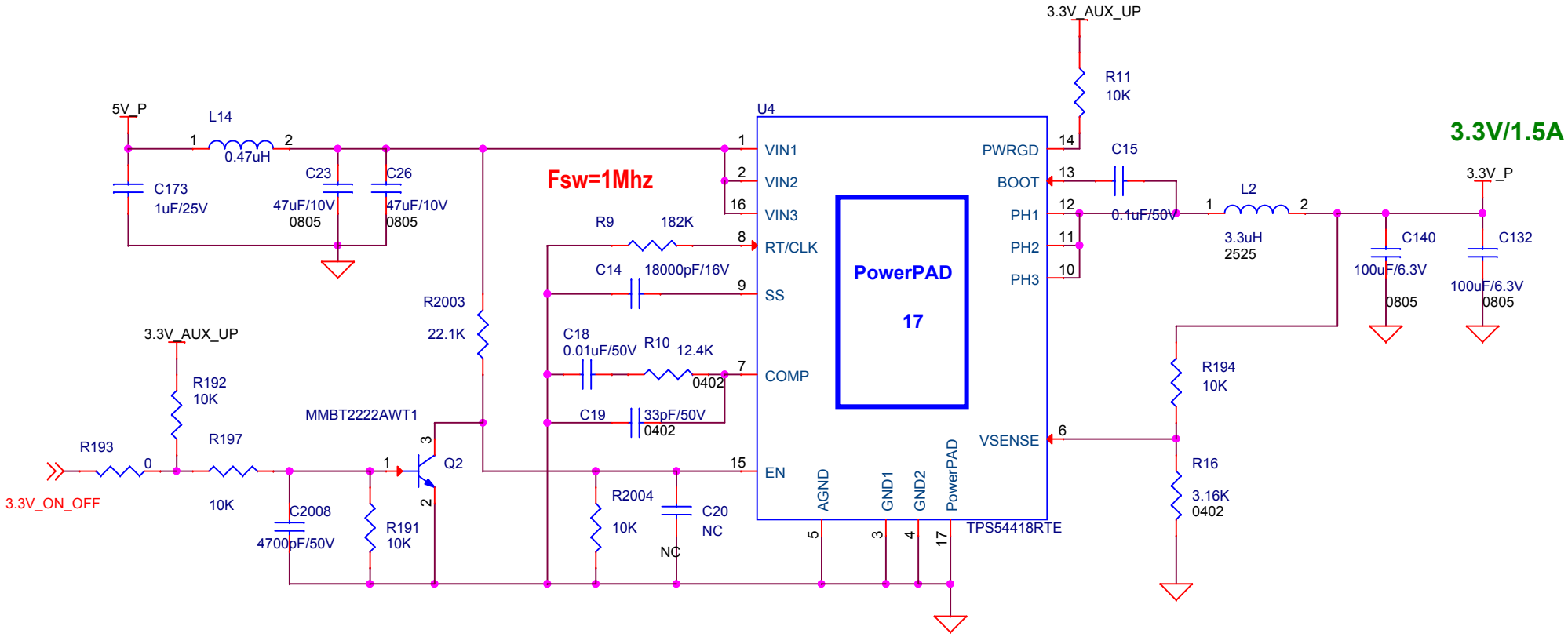
3.3V/1.5A
Fsw=1Mhz
5V_P
L14
0.47uH
C173
1uF/25V
C23
47uF/10V
0805
C26
47uF/10V
0805
U4
VIN1
VIN2
VIN3
RT/CLK
SS
COMP
EN
AGND
GND1
GND2
PowerPAD
PWRGD
BOOT
PH1
PH2
PH3
VSENSE
PowerPAD
17
TPS54418RTE
3.3V_AUX_UP
R11
10K
C15
0.1uF/50V
L2
3.3uH
2525
3.3V_P
C140
100uF/6.3V
0805
C132
100uF/6.3V
0805
R194
10K
R16
3.16K
0402
R9
182K
C14
18000pF/16V
C18
0.01uF/50V
R10
12.4K
0402
C19
33pF/50V
0402
R2003
22.1K
3.3V_AUX_UP
R192
10K
MMBT2222AWT1
Q2
R193
0
3.3V_ON_OFF
R197
10K
C2008
4700pF/50V
R191
10K
R2004
10K
C20
NC
NC