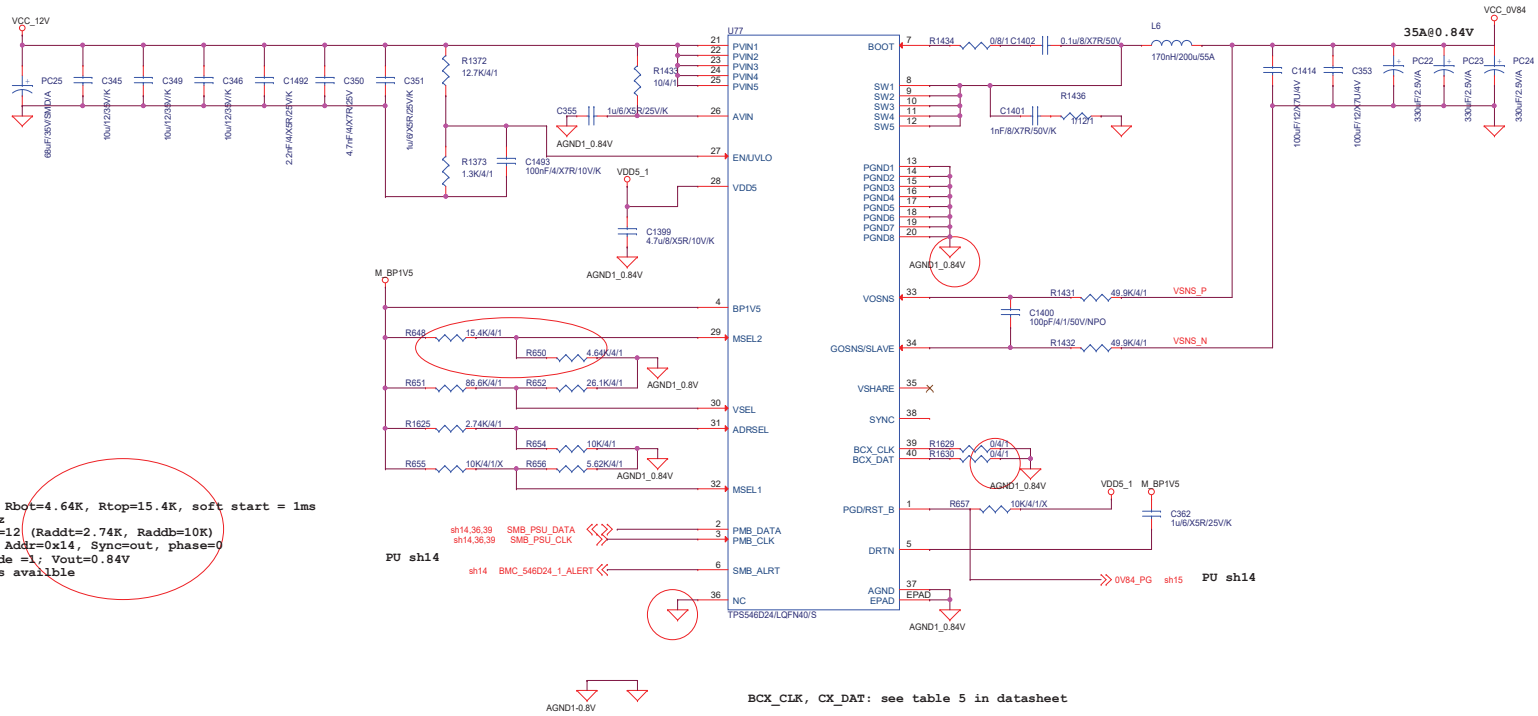

MSEL2=R2G=0, Div code=1, Rbot=4.64K, Rtop=15.4K, soft start = 1ms
MSEL1: NC to 1.5V: 550Khz
ADRSEL: R2G=4, Divi code=12 (Raddt=2.74K, Raddb=10K)
  Addr range 0x10-0x1F, Addr=0x14, Sync=out, phase=0
VSEL: R2G =9. devider code =1; Vout=0.84V
Auto power on when 12V is availble

BCX_CLK, CX_DAT: see table 5 in datasheet

EXCEPT 3.3VSTB ALL POWER RAILS COME UP AT THE SAME TIME. 3.3V MUST NOT COME UP BEFORE 1.8V (PM40100 DEVICE SPEC)

Title	Rugged JBOF Schematic		
Size C	Document Number <Doc>		Rev 0.3
Date: Wednesday, May 13, 2020	Sheet 35 of 42		

Output is 0.84V but use 0.82V
netname to avoid conflict with page 35

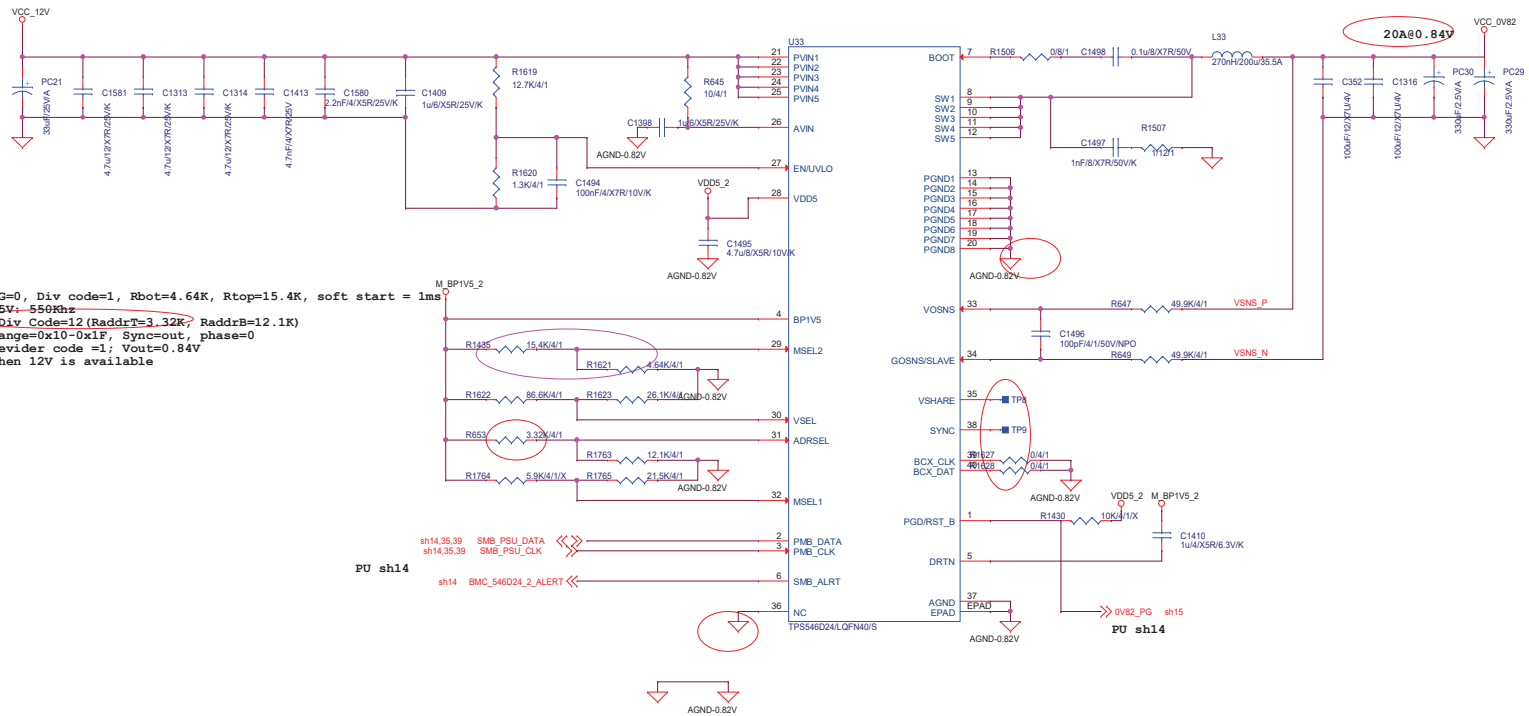

MSEL2: MSEL2=R2G=0, Div code=1, Rbot=4.64K, Rtop=15.4K, soft start = 1ms
MSEL1: NC to 1.5V; 550Khz
ADRSEL: R2G=5, Div Code=12(RaddrT=3.32K, RaddrB=12.1K)
Addr=0x15, Range=0x10-0x1F, Sync=out, phase=0
VSEL: R2G =9. devider code =1; Vout=0.84V
Auto power on when 12V is available

BCX_CLK, CX_DAT: see table 5 in datasheet

EXCEPT 3.3VSTB ALL POWER RAILS COME UP AT THE SAME TIME. 3.3V MUST NOT COME UP BEFORE 1.8V (PM40100 DEVICE SPEC)

Title	Rugged JBOF Schematic	
Size C	Document Number <Doc>	Rev 0.3
Date: Wednesday, May 13, 2020	Sheet 36 of 42	