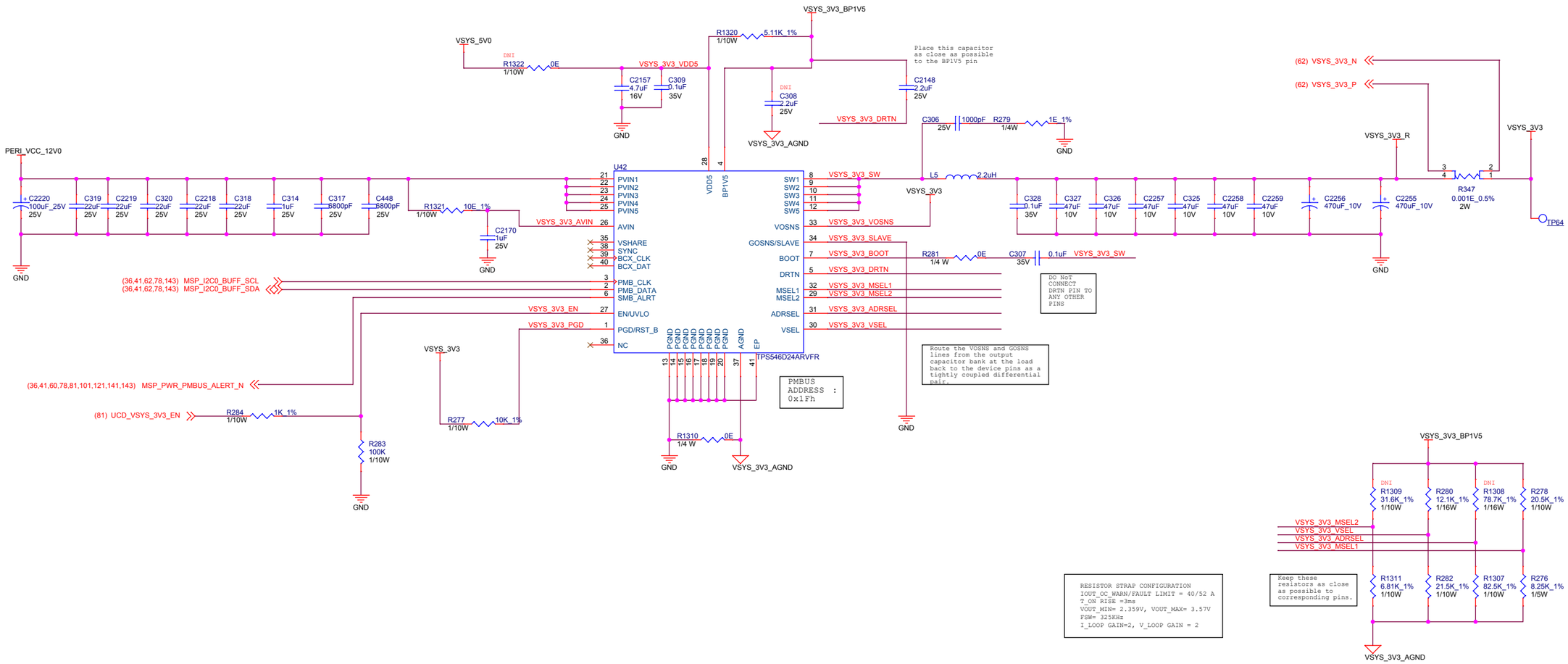PERIPHERAL 3.3V SUPPLY
25A