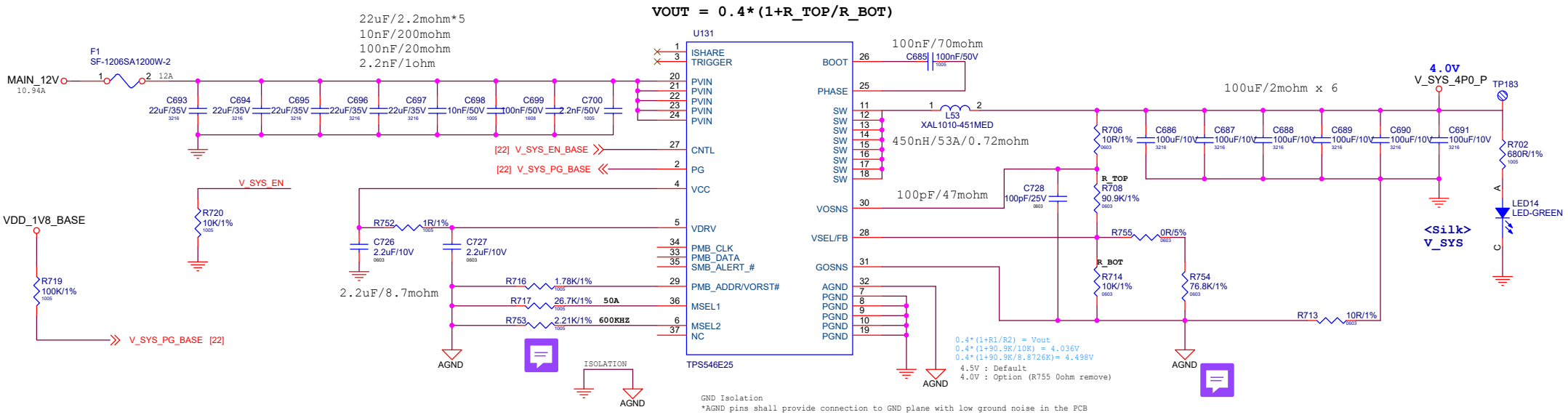

Title	<Title>
Size A3	Document Number <Doc>
Rev	<RevCod
Date: Thursday, September 04, 2025	Sheet 1 of 1

2025/09/04-12:53:36 7085C2C12153