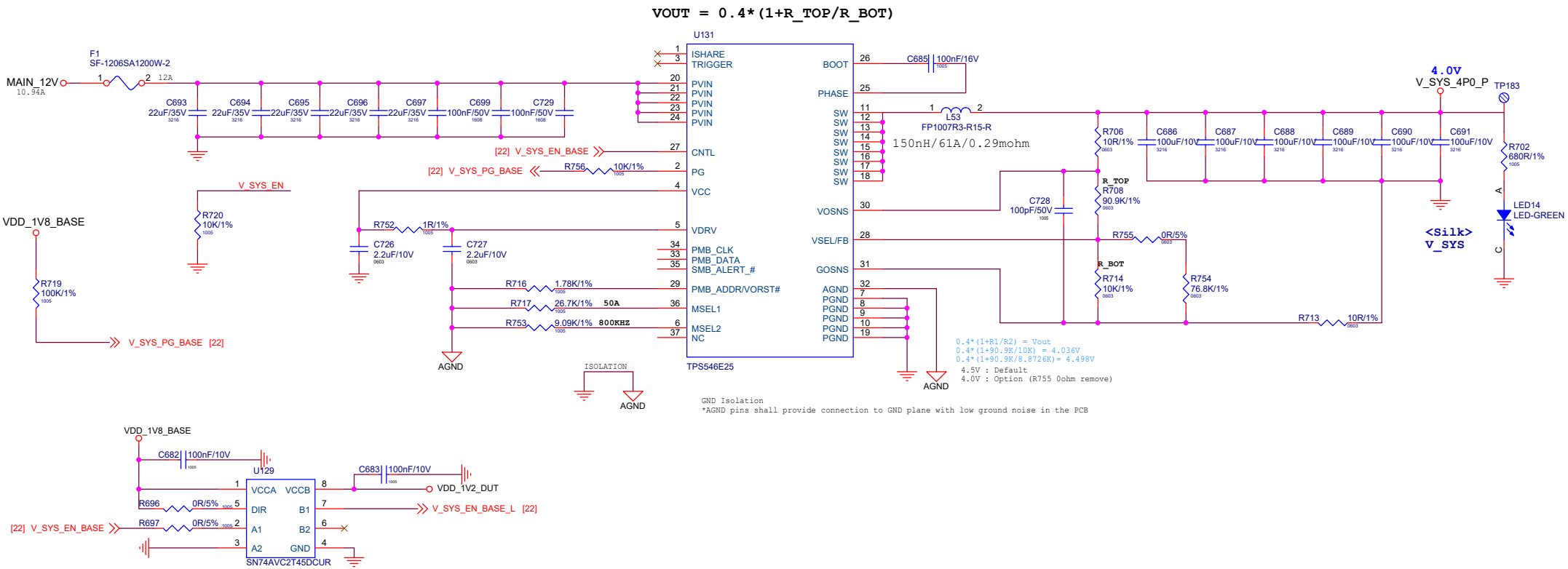

Title <Title>		
Size A3	Document Number <Doc>	Rev <RevCod
Date: Friday, September 05, 2025	Sheet 1 of 1	

2025/09/05-14:44:20 7085C2C12153