Size [metric]

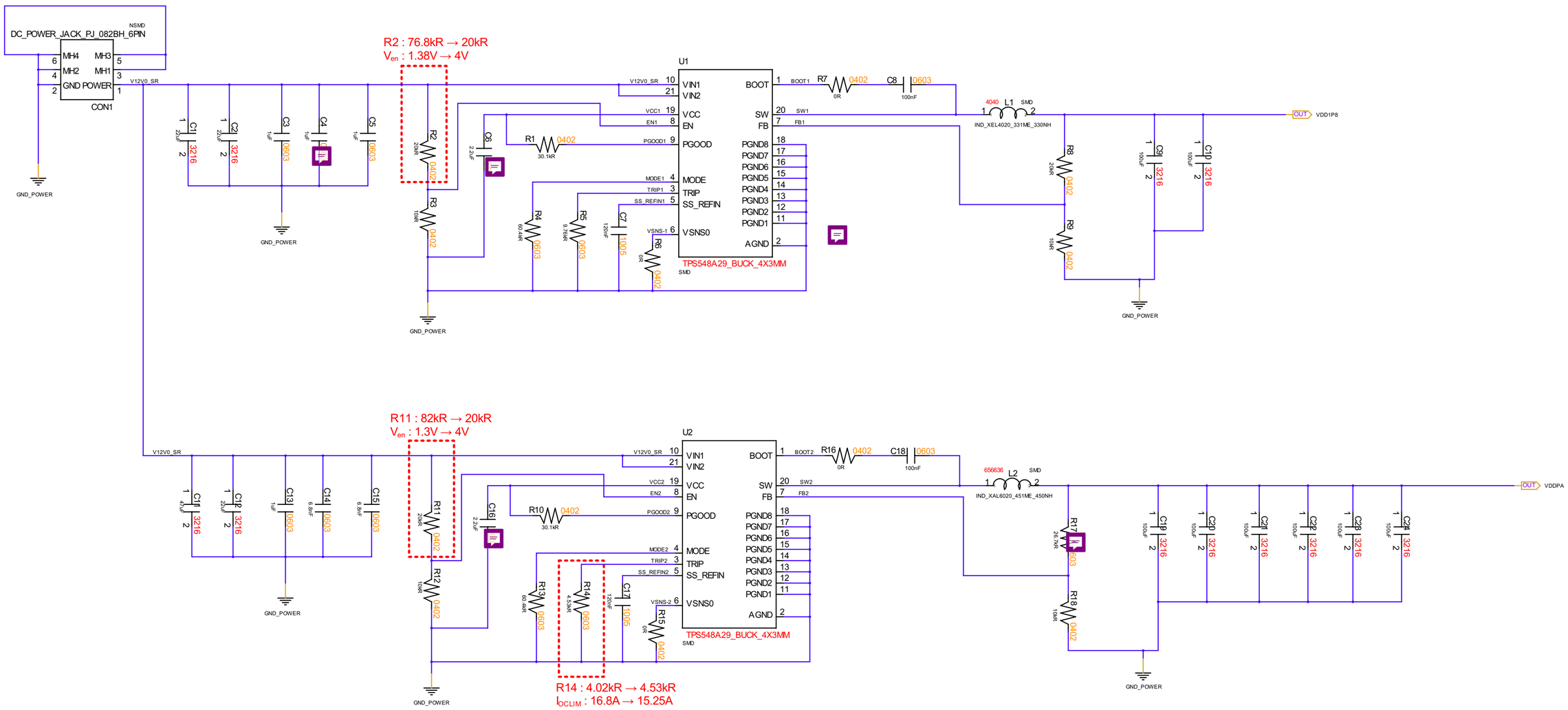
DC_POWER_JACK_PJ_082BH_6PIN
NSMD
MH4
MH3
MH2
MH1
GND POWER
CON1
V12V0_SR
GND_POWER
R2 : 76.8kR → 20kR
Ven : 1.38V → 4V
U1
VIN1
VIN2
VCC
EN
PGOOD
MODE
TRIP
SS_REFIN
VSNS0
BOOT
SW
FB
AGND
PGND8
PGND7
PGND6
PGND5
PGND4
PGND3
PGND2
PGND1
TPS548A29_BUCK_4X3MM
SMD
IND_XEL4020_331ME_330NH
OUT
VDD1P8
R11 : 82kR → 20kR
Ven : 1.3V → 4V
U2
IND_XAL6020_451ME_450NH
VDDPA
R14 : 4.02kR → 4.53kR
IOCLIM : 16.8A → 15.25A
TPS548A29_BUCK_4X3MM