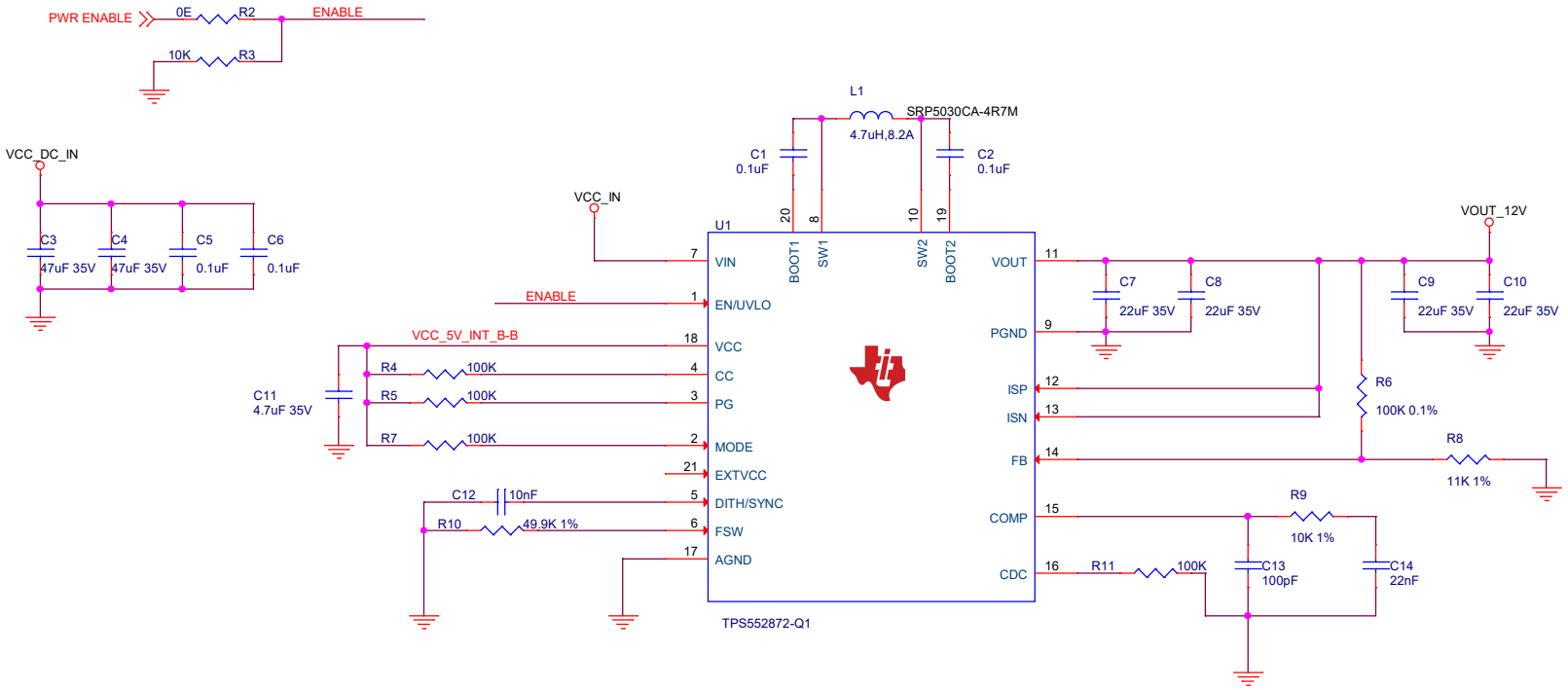
PWR ENABLE
0E
R2
ENABLE
10K
R3
VCC_DC_IN
C3
47uF 35V
C4
47uF 35V
C5
0.1uF
C6
0.1uF
L1
SRP5030CA-4R7M
4.7uH,8.2A
C1
0.1uF
C2
0.1uF
VCC_IN
U1
VIN
BOOT1
SW1
SW2
BOOT2
VOUT
EN/UVLO
PGND
VCC
CC
PG
ISP
ISN
MODE
FB
EXTVCC
DITH/SYNC
FSW
COMP
AGND
CDC
TPS552872-Q1
VOUT_12V
C7
22uF 35V
C8
22uF 35V
C9
22uF 35V
C10
22uF 35V
VCC_5V_INT_B-B
R4
100K
R5
100K
R7
100K
C11
4.7uF 35V
C12
10nF
R10
49.9K 1%
R6
100K 0.1%
R8
11K 1%
R9
10K 1%
R11
100K
C13
100pF
C14
22nF